Projector Service Manual

Model:
X1140A, X1240, X1140, P1340W, X1340WH, H6510BD

Version: Rev6
First Edition (Apr. 2012)

RESTRICTIONS ON USE OF MATERIALS:

Index

REVISION LIST **3**

CHAPTER 1 SYSTEM SPECIFICATION **4**

Product Specification 4
System Block Diagram 21
Product Overview 23

CHAPTER 2 SYSTEM UTILITIES **27**

Firmware Upgrade SOP 27
Method to Enter Factory Menu 39
EDID Upgrade SOP 40
Serial Number Upgrade SOP 44

CHAPTER 3 SYSTEM DISASSEMBLING AND REPLACEMENT **47**

Main Unit Disassembling 47
Module Assembly Key Point - Optical Engine 52
Module Assembly Key Point - Mechanical 77

CHAPTER 4 TROUBLESHOOTING **93**

System Analysis 93
Optical Problems Checking Items 94
Power Supply Problems Checking Flow 100
LED Messages Definition 103
Error Count Messages Definition 104
RS232 Connection 106
Adjustment / Alignment Procedure 108

CHAPTER 5 FRU LIST **113**

Exploded Diagram 113
Module 1 – Total Exploded View 113
Module 2 – ASSY UPPER CASE 114
Module 3 – ASSY LOWER CASE 114
Module 4 – ASSY REAR CASE 115
FRU List 116

APPENDIX A - CODE LIST: IR / RS232 / DDC DATA **123**

1. Remote Control Code 123
2. RS-232 Command Code 125
3. DDC Data 127

APPENDIX B – SCHEMATICS **130**

Revision List

Version	Release Date	Revision History	Vendor Model Name
Rev0	2012.04.13	First Release	
Rev1	2012.05.07	Add X1240	
Rev2	2012.06.11	Add X1140	
Rev3	2012.08.03	Add P1340W	
Rev4	2012.11.13	Add H6510BD	
Rev5	2013.10.14	Add model name X1340WH	
Rev6	2013.10.23	Correct Chapter 1 System specification: 1.4.1 and 1.4.2 Light Leakage for H6510BD 2.1 Throw Ratio 2.2 Zoom Ratio 2.4 Projection Offset 15.3 Speaker	

Chapter 1 System Specification

Product Specification

1.0 Optical Performance
2.0 Image Quality
3.0 Mechanical Specification
4.0 Packaging
5.0 Thermal Specification
6.0 Environmental
7.0 Regulatory
8.0 Reliability
9.0 Power Requirements
10.0 Panel Specification
11.0 Compatibility
12.0 Image Interface
13.0 Control Interface
14.0 User Interface

1.0 Optical Performance	Tested under 60” (diagonal) image size with Wide projection lens position unless other specified.	
1.1 ANSI Brightness	**X1140A/X1240/X1140/P1340W/X1340WH :** Minimum 2160 Lumens Typical 2430 Lumens (For reference) **H6510BD :** Minimum 2400 Lumens Typical 2700 Lumens (For reference)	
1.2 Brightness Uniformity		
1.2.1 ANSI Uniformity	**X1140A/X1240/X1140 :** Minimum -45% **P1340W/X1340WH/H6510BD :** Minimum-50%	
1.2.2 JBMA Uniformity	**X1140A/X1240/X1140 :** Minimum 75% **P1340W/X1340WH :** Minimum 70% **H6510BD :** Minimum 65%	
1.2.3 Upper-Down unbalance	0.5~2	
1.2.4 Left-Right unbalance	0.6~1.67	
1.3 Contrast Ratio		
1.3.1 ANSI Contrast	Minimum 150:1	
1.3.2 FOFO Contrast without APM	Minimum 2000:1	
1.3.3 FOFO Contrast with APM	**X1140A/X1240/X1140/P1340W/X1340WH :** Minimum 8000:1 Typical 10000:1 (For reference) **H6510BD :** Minimum 6000:1 Typical 7500:1 (For reference)	
1.4 Light Leakage		
1.4.1 Light Leakage in Active Area	**X1140A/X1240/X1140 :** <0.5 lux compared to center point within 60” (Diagonal at 2.3m, Wide) image size. **P1340W/X1340WH/H6510BD :** <0.5 lux compared to center point within 60” (Diagonal at 1.9m, Wide) image size. **H6510BD:** <0.5 lux compared to center point within 60” (Diagonal at 1.53m, Wide) image size. Note: This light leakage in Active area is only described as the spot light with obvious shape. It is not included the uniformity difference of the projector for black pattern.	
1.4.2 Light Leakage out of Active Area (Except DMD Defect)	**X1140A/X1240/X1140 :** <0.5 lux with 60”~80“(Diagonal at 2.3m, Wide) image size **P1340W/X1340WH/H6510BD :** <0.5 lux with 60”~80“(Diagonal at 1.9m, Wide) image size **H6510BD:** <0.5 lux with 60”~80“(Diagonal at 1.53m, Wide) image size	
1.5 Color	Reference meter: Vendor Lab CS1000 Spectroradio Meter (S/N: 00370975) (Spec will be confirmed at PVT stage) C/W angle : R83Y45W52C35B64G81	
	X	Y
1.5.1 White	0.308±0.04	0.369±0.04
1.5.2 Red	0.646±0.04	0.340±0.04
1.5.3 Green	0.309±0.04	0.616±0.04
1.5.4 Blue	0.146±0.03	0.053±0.03
1.6 Color Uniformity	ΔX	ΔY

1.6.1 White	0.040	0.040
1.6.2 Red	0.040	0.040
1.6.3 Green	0.040	0.040
1.6.4 Blue	0.040	0.040
1.7 Color Gamut	Typ 70% compare NTSC	
1.8 WBA Criterion for Standard mode	1. **X1140A/X1240/X1140 :** PC source White Color is (0.313+/-0.006, 0.326+/-0.006). **P1340W/X1340WH/H6510BD :** PC source White Color is (0.313+/-0.006, 0.324+/-0.006). 2. Typ~70% Brightness compare with Bright mode for reference.	
2.0 Image Quality		
2.1 Throw Ratio	**X1140A/X1240/X1140 :** 53"±3% @ 2m (1.86~2.04) Wide **P1340W/X1340WH :** 62"±3% @ 2m (1.5~1.65) Wide **H6510BD :** 78.3"±3% @ 2m (1.15~1.5) Wide	
2.2 Zoom Ratio (tolerance applied)	**X1140A/X1240/X1140/P1340W/X1340WH :** 1.1±2% **H6510BD :** 1.3±2%	
2.3 Distortion		
2.3.1 Keystone Distortion	<1.0%	
2.3.2 Vertical TV Distortion	<1.0%	
2.4 Projection Offset	**X1140A/X1240/X1140 :** 120% ±5% **P1340W/X1340WH :** 100% ±5% **H6510BD :** 110+-5%	
2.5 Focus Range		
2.5.1 Visible Range	1~8 m	
2.5.2 Clearly Focus Range	1.5~6 m(Spec. defined as item 2.6)	
2.6 Focus		
2.6.1 ☒ Pattern	(1) If pattern can be uniformly focused (not worse than Limit Sample), then pass! Limit Sample: Mercury Projector, S/N: 282596-00128 (2) If it's difficult to judge, then check 2.6.2	
2.6.2 Defocus and Flare	Defocus: R<=3.5; G<=3.0; B<=3.0 pixel Flare: R<=4.0; G<=4.0; B<=4.0 pixel Slight flare is not counted as flare.	
2.6.3 Focus unbalance	Adjust focus from near to far until one corner clear, difference less than 50 cm	
2.7 Lateral Color		Center of 49"diagonal area / All other area
	R-G	<2/3 / <1
	G-B	<2/3 / <1
	R-B	<1 / <1
2.8 Image Quality		
2.8.1 DMD Image Quality		
2.8.2 Image Imperfection		
2.9 Lamp Type	**X1140A/X1240/X1140/P1340W/X1340WH :** 190W Osram (P-VIP 180W 0.8 E20.8) **H6510BD :** Osram 210w (P-VIP 210/0.8/E20.9n)	
3.0 Mechanical Specification		
3.1 Dimensions	264 x 220 x 78.4 mm (W x D x H)	

3.2 Weight	**X1140A/X1240/X1140/H6510BD :** <2000g **P1340W/X1340WH :** <2200g	
3.3 Security Slot	>36 Kg	
3.4 Lens Cover	N/A	
3.5 Feet	Fast adjustable foot in front, Adjustable foot and Fixed foot in rear. Foot Tilt:0-6° ,right/left: +2.2° /-0.5°	
3.6 Appearance	Follow packing section	
4.0 Packaging	Detail refer to Packing Description	
4.1 Outside Dimensions	360 * 160 * 297 mm (L * W * H)	
4.2 Weight	**X1140A/X1240/X1140/P1340W/X1340WH/H6510BD:** < 3.3 kg (Including Accessories, Projector)	
4.3 Transportation	42 EA by Air; 3136 EA @ 40' container, or 1372 EA @ 20' container by Sea	
5.0 Thermal Specification	Mechanical component temperature at ambience 0~40℃	
5.1 Surface held or touched for short periods	Metal	Plastic
	<60°C	<85°C
5.2 Surface which may be touched	Metal	Plastic
	<70°C	<95°C
5.3 Exhaust Air	<95°C	
5.4 Overheat protection	Overheat protection auto shutdown must work properly by 47±2℃ambient temperature	
5.5 Fan Numbers	Lamp Fan: #1 70x70x25mm x 1pcs Blower Fan: #2 50x50x20mm x 1pcs	
6.0 Environmental		
6.1 Temperature	Operating	0~40°C, without condensation
	Storage	-30~65℃, without condensation
6.2 Humidity	Operating	10~90%RH, without condensation
	Storage	10~90%RH, without condensation
6.3 Audible Noise Level	Typical	**X1140A/X1240/X1140/P1340W/X1340WH :** Normal mode: 33dBA @ 23±2℃, CW x2 speed Eco mode: 29dBA @ 23±2℃, CW x2 speed Normal mode: 35dBA @ 23±2℃, CW x3 speed Eco mode: 31dBA @ 23±2℃, CW x3 speed **H6510BD :** Normal mode: 35dBA @ 23±2℃, CW x2 speed Eco mode: 29dBA @ 23±2℃, CW x2 speed Normal mode: 37dBA @ 23±2℃, CW x3 speed Eco mode: 31dBA @ 23±2℃, CW x3 speed
	Maximum	**X1140A/X1240/X1140/P1340W/X1340WH :** Normal mode: 35dBA @ 23±2℃, CW x2 speed Eco mode: 31dBA @ 23±2℃, CW x2 speed Normal mode: 37dBA @ 23±2℃, CW x3 speed Eco mode: 33dBA @ 23±2℃, CW x3 speed **H6510BD :** Normal mode: 37dBA @ 23±2℃, CW x2 speed Eco mode: 31dBA @ 23±2℃, CW x2 speed Normal mode: 39dBA @ 23±2℃, CW x3 speed Eco mode: 33dBA @ 23±2℃, CW x3 speed

6.4 Altitude	Operating: 1. 12,000 feet @ 25℃ (3.5 hours) 2. Altitude Ramp rate: <= 3500 feet per minute (1 hour) Non-operating: 40,000 feet @ -30 ℃ (1 hour)	
6.5 Shock		
6.6 Drop		
6.7 Vibration		
7.0 Regulatory	Safety	CB, GS, UL,CCC, CECP *PSE: Customer apply by themselves
	EMC	CE, FCC, VCCI
	ESD	
8.0 Reliability		
8.1 MTBF	25000 hours at 35℃ (except Lamp)	
8.2 Lamp Lifetime	Normal : 4500 hours Eco: **X1140A/X1240/X1140/P1340W/X1340WH:** 6000 hours, **H6510BD :** 5000 hours. Dynamic Eco : 7000 hours (Dynamic dimming + Extreme dimming) (50% of Projector will have 50% initial minimum brightness)	
9.0 Power Requirements		
9.1 Power Supply (Normal)	VAC 100 – 240 (50/60Hz),	
9.2 Power consumption	Typical	**X1140A/X1240/X1140/P1340W/X1340WH :** 240W @ 100VAC~240VAC **H6510BD :** 270W @ 100VAC~240VAC
	Max.	**X1140A/X1240/X1140/P1340W/X1340WH :** 250W @ 100VAC~240VAC **H6510BD :** 290W @ 100VAC~240VAC
	Standby	0.5W Max. at 100~240VAC (VGA out loop through is disabled)
9.3 Power Connector	IEC60320C14	
10.0 Panel Specification		
10.1 Type	**X1140A/X1240/X1140 :** 0.55” SVGA 2xLVDS Series 450 DMD **P1340W/X1340WH :** 0.65" WXGA, 1280x800 **H6510BD :** 0.65" 1080p 2xLVDS S600 DMD	
10.2 Pixels	**X1140A/X1140**: H: 800 X V: 600 **X1240**: H: 1024 X V: 768 **P1340W/X1340WH :** H: 1280 X V: 800 **H6510BD :** H: 1920 X V: 1080	
10.3 Color Depth	30 Bits (1.07 Billion Colors)	
11.0 Compatibility		
11.1 PC	**X1140A/X1240/X1140 :** PC Compatible 640X480 → 800X600, compressed 1600X1200; Sync-on-Green (For Mac Timing Only) **P1340W/X1340WH :** PC Compatible 640X480 → 1280X800, compressed to 1900X1200 (60Hz Reduce Blanking); Sync-on-Green (For Mac Timing Only) **H6510BD :** PC Compatible 640X480 → 1920X1080, compressed to 1900X1200 (60Hz Reduce Blanking); Sync-on-Green (For Mac Timing Only)	

11.2 Video	NTSC/ NTSC4.43/ PAL (Including PAL-M, PAL-N)/ SECAM/ PAL60/
11.3 YpbPr	NTSC (480i)/ 480p/ PAL (576i)/ 576p, HDTV (720p/1080i/1080p)
11.4 DDC	EDID 1.3
12.0 Image Interface	
12.1 Analog RGB Input	**X1140/H6510BD :** 15 pin D-Sub (Female) x 1 **X1140A/X1240/P1340W/X1340WH :** 15 pin D-Sub (Female) x 2 G(Y): Video amplitude 0.7/1.0 Vp-p : Impedance 75Ω RB(CbCr): Video amplitude 0.7 Vp-p : Impedance 75Ω HD/VD/CS: TTL Level
12.2 Video Input	RCA jack (Yellow) Video amplitude 1.0 V_{p-p} : Impedance 75Ω
12.3 S-Video Input	4 pin Mini-Din (Female) Y: Luminance amplitude 1.0 V_{p-p} : Impedance 75Ω C: Chroma amplitude 0.286 V_{p-p} : Impedance 75Ω
12.4 YpbPr Input	**X1140 :** 15 pin D-Sub (Female) x 1 **X1140A/X1240/P1340W/X1340WH :**15 pin D-Sub (Female) x 2 **H6510BD :** RCA jack (R G B) x 1 Y: Luminance amplitude 1.0 V_{p-p}: Impedance 75Ω PbPr/C_bC_r: Chroma amplitude 0.7 V_{p-p} : Impedance 75Ω
12.5 Analog RGB Output	**X1140 :** NA **X1140A/X1240/P1340W/X1340WH/H6510BD :** 15 pin D-Sub (Female) x 1 (Only support D-sub 1) G(Y): Video amplitude 0.7/1.0 Vp-p : Impedance 75Ω RB(CbCr): Video amplitude 0.7 Vp-p : Impedance 75Ω HD/VD/CS: TTL Level
12.6 HDMI Input	**X1140A/X1240/X1140 : N/A** **P1340W/X1340WH/H6510BD :** 1. 19 pin HDMI connector x 1 2. HDMI V1.4/HDCP/EDID V1.3 3. HDMI-Video/audio and HDMI-Graphic Signal 4. HDMI-Graphic Signal resolution is up to 1600x1200@60Hz 5. Down-mix 5.1channel to stereo channels
13.0 Control Interface	
13.1 IR Receiver	IR Receiver x 1 (Front) Angle: ±0° Distance 0~10m ; ±40° Distance 0~8m
13.2 Serial Connector	RS232 interface, D-Sub 9pin (Male type), command table adhere to Appendix A
13.3 USB Connector	Mini Type B x 1 Terminal for page up/down & Firmware download
14.0 User Interface	
14.1 Operator Keypad	9 Keys: Power ; Source ; Resync ; e ; Menu ; Left ; Right ; Up(Keystone+) ; Down(Keystone-)
14.2 Indicators	3 LEDs: Power On/Off Status; Lamp Status; Temperature Status
14.3 Electric Keystone	1.**X1140/H6510BD :** Manual vertical keystone and

	adjustable range ±40 **X1140A/X1240/P1340W/X1340WH :** Auto and Manual vertical keystone and adjustable range ±40 2. When CC enable and aspect ratio 16:9, keystone range ±38°
14.4 Auto Ceiling mount detection	**X1140A/X1240/X1140/P1340W/X1340WH :** Projector will auto-detect and project by aligned screen like auto-keystone effect no matter which projection method (Front, Rear) **H6510BD :** N/A
14.5 Digital Zoom	Digital zoom 2X (**X1140A/X1240/X1140 :** 120Hz 3D on, Digital Zoom 1.8X) (**P1340W/X1340WH/H6510BD :** 3D on, Digital Zoom 1.4X)
14.6 Language	**X1140A/X1240/X1140/H6510BD :** English, Germany, Spanish, French, Italian, Portuguese, 中文（繁), 中文（簡), Russian, Polish, Thai, Dutch, Czech, Danish, Swedish, Hungarian, Turkish, Japanese, Korean, Vietnamese, Arabic (total 21 languages) **P1340W/X1340WH :** English, Germany, Spanish, French, Italian, Portuguese, 中文（繁), 中文（簡), Russian, Polish Thai, Dutch, Czech, Danish, Swedish, Hungarian, Turkish, Japanese, Korean, Vietnamese, Arabic (16 languages, total 21 languages in two groups)
15.0 Audio	
15.1 PC Audio Input	**X1140:** NA **X1140A/X1240/P1340W/X1340WH/H6510BD :** Φ3.5mm stereo mini jack 500mVrms 10 KΩ or more
15.2 Audio output	**X1140:** NA **X1140A/X1240/P1340W/X1340WH/H6510BD :** Φ3.5mm stereo mini jack
15.3 Speaker	**X1140:** NA **X1140A/X1240/P1340W/X1340WH :** Speaker 8Ω 2W X 1, Amplifier 1W X1 **H6510BD:** Speaker 4Ω 2W X 1, Amplifier 1.5W X1
16.0 Lamp hour	**X1140A/X1240/X1140/P1340W/X1340WH :** Lamp hour = [Hour used in Normal Mode] + 4.5/6 *[Hour used in Eco. Mode] + 4.5/7 *[Hour used in Dynamic Eco Mode] **H6510BD :** Lamp hour = [Hour used in Normal Mode] + 4/5 *[Hour used in Eco. Mode] + 4/7 *[Hour used in Dynamic Eco Mode]
17.0 Closed Caption (CC)	
17.1 CC version	CC1/CC2/CC3/CC4
18.0 Instant On	Yes
19.0 3D Projection	**X1140A/X1240/X1140 :** 1. Support DLP 3D PC source 100/120Hz 2. VGA support timing：640x480, 800x600, 1024x768 @100/120Hz

	P1340W/X1340WH/H6510BD : 1. Support DLP 3D PC source 50/60/100/120Hz and Video source 50/60Hz 2. VGA and HDMI(PC) support timing：640x480, 800x600, 1024x768, 1280x800@50/60/100/120Hz 3. Video, S-Video, Component and HDMI(Video) support timing：HQFS 3D (480i@60Hz), 576i@50Hz 4. HDMI(Video) support timing： (1) HQFS 3D (480i@60Hz) , 576i@50Hz (2) HDMI 1.4a mandatory： Frame Packing (1080p@23.98/24Hz, 720p@50/60Hz) Side-by-Side Horizontal (1080i@50/60Hz) Top-and-Bottom (720p@50/60Hz, 1080p@23.97/24Hz)
20.0 Smart Source Detection	
21.0 Color Safe II	1. Projectors can compensate the color distortion due to the performance decay of lamp, color wheel, or some system components 2. The digital gains are apply on HSG WR, WG, and WB components with time pass, the digital gains are defined as color safe gain table with time (hours) 3. The color safe gain table will be released while the lamp life data reach 1000 hours and color safe function will implement at the same time
22.0 Dynamic Eco	1. Mode set up: Extreme dimming mode and Dynamic dimming mode 2. Advantage: (1) Enhance dynamic image contrast (2) Energy can be saved during content with dark scenes in dynamic dimming mode 3. Behavior: (1) Extreme dimming: Projector lamp power is decreased to ~30% of normal mode. When project is set to extreme dimming mode, which can be operated by the cycle lamp power 30% during 30 minutes and automatic recovery to eco mode 5~7 minutes. Projector lamp power come back to normal / eco mode within 5 sec. whenever projector is set to normal / eco mode. (2) Dynamic dimming: Frame-by-frame power adaption 100%~70% base on dark scene.

3D Projection:

- **For X1140A/X1240/X1140:**

(1) This function is only for 3D contents and must wear 3D glasses.

TI DDP DDP2431
• Can support 120Hz 3D source from PC

(2) 3D Function Detail Description :

- 3D: DLP 3D, off. Default is Off.
- DLP 3D
  - Select this item while using DLP 3D glasses, quad buffer (NVIDIA/ATI...) graphics card.
- “3D Sync Invert” is adjustable when above "3D" is on. Otherwise gray out. When you discover the inversion of the image depth (for your Left/Right eyes), do the invert action to solve this condition.
  - 3D Sync Invert only enable for DLP 3D, otherwise it will be gray out
  - When 3D is enabled, Display Mode and Color temperature (in Color Page) is not adjustable.
- Function disable :
  - When meeting 120Hz (no matter 3D on or off, HSG only one set value), if end user adjust adjustable items (ex. brightness) , the value will not been stored and only for that use only.
- If non-3D mode (120Hz), keep normal/same brightness.
- 3D function can be opened when 100/120Hz for PC source.
- Refresh rate change to not supported 3D timings under 3D mode, please show warning message of "**Input Not Supported under 3D mode**", to enforce user to change back.
- 3D Warning message
  - When 3D is enabled, this screen will appear after exit OSD menu.
  - It shows only once of that source after power on. (one source one time only)
  - Show it while switching to another source which is set as 3D on and the message was not shown in that source after power on. Not show it while timing changes. (or adjust to off 3D Warning message)
  - Priority: PWD login screen (Security fn is on) → Lamp life reminder → 3D reminder Screen → Timer and other OSD pup-up fn.
  - Pop-up screen and appear 10 sec in the center of the screen. End-users can press Menu to exit within 10 sec.
  - Turn On/Off 3D warning message mechanism. Add one function item in OSD menu.
  - Reminder screen

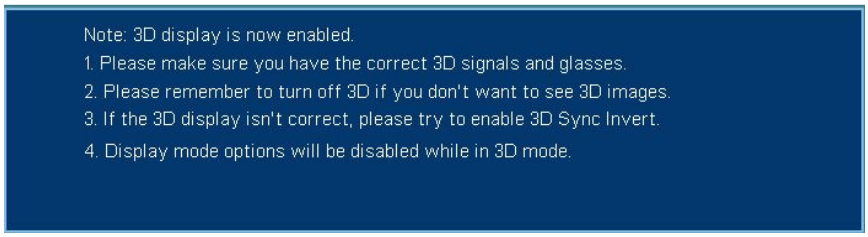

- **For P1340W/X1340WH/H6510BD :**

(1) This function is only for 3D contents and must wear 3D glasses.

TI DDP DDP2431
Support FRC (Frame Rate Conversion) Can support HQFS 60Hz 3D source from DVD which need to go thru FRC Can support 120Hz 3D source from PC

(2) 3D Function Detail Description :

- 3D : DLP 3D, off. Default is Off.
- DLP 3D
  - Select this item while using DLP 3D glasses, quad buffer (NVIDIA/ATI...) graphics card and HQFS format file or DVD with corresponding SW player.
- “3D Sync **Invert**” is adjustable when above "3D" is on. Otherwise gray out. When you discover the inversion of the image depth (for your Left/Right eyes), do the invert action to solve this condition.
  - 3D Sync **Invert** only enable for DLP 3D, otherwise it will be gray out
  - When 3D is enabled, Display Mode and Color temperature (in Color Page) is not adjustable.
- Function disable :
  - When meeting 60/120Hz (no matter 3D on or off, HSG only one set value), if end user adjust adjustable items (ex. brightness), the value will not been stored and only for that use only.
- If non-3D mode (120Hz), keep normal/same brightness.
- 3D function can be opened when 50/60Hz for Video source and 100/120Hz for PC source.
- Refresh rate change to not supported 3D timings under 3D mode, please show warning message of "**Input Not Supported under 3D mode**", to enforce user to change back.
- 3D Warning message
  - When 3D is enabled, this screen will appear after exit OSD menu.
  - It shows only once of that source after power on. (one source one time only)
  - Show it while switching to another source which is set as 3D on and the message was not shown in that source after power on. Not show it while timing changes. (or adjust to off 3D Warning message)
  - Priority : PWD login screen (Security fn is on) -> Lamp life reminder -> 3D reminder Screen -> Timer and other OSD pup-up fn.
  - Pop-up screen and appear 10 sec in the center of the screen. End-users can press Menu to exit within 10 sec.
  - Turn On/Off 3D warning message mechanism. Add one function item in OSD menu.
  - Reminder screen

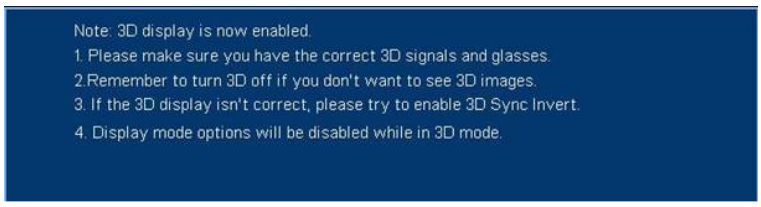

Electrical Specification

1. Timing Table

The PC timing is as following:

Resolution	Mode	Refresh rate (Hz)	H-frequency (kHz)	Clock (MHz)
640 x 480	VGA_60	59.940	31.469	25.175
	VGA_72	72.809	37.861	31.500
	VGA_75	75.000	37.500	31.500
	VGA_85	85.008	43.269	36.000
	VGA_120	119.518	61.910	52.500
800 x 600	SVGA_56	56.250	35.156	36.000
	SVGA_60	60.317	37.879	40.000
	SVGA_72	72.188	48.077	50.000
	SVGA_75	75.000	46.875	49.500
	SVGA_85	85.061	53.674	56.250
	SVGA_120	119.854	77.425	83.000
1024 x 768	XGA_60	60.004	48.363	65.000
	XGA_70	70.069	56.476	75.000
	XGA_75	75.029	60.023	78.750
	XGA_85	84.997	68.677	94.500
	XGA_120	119.804	98.958	137.750
1152 x 864	SXGA_70	70.012	63.851	94.500
	SXGA_75	75.000	67.500	108.000
1152 x 864	SXGA_85	84.990	77.094	121.500
1280 x 1024	SXGA_60	60.020	63.981	108.000
	SXGA_72	72.000	76.970	134.600
	SXGA_75	75.025	79.976	135.000
	SXGA_85	85.024	91.146	157.500
1280 x 960	QuadVGA_60	60.000	60.000	108.000
	QuadVGA_75	75.000	75.000	126.000
1400 x 1050	SXGA+_60	59.978	65.317	121.750
1600 x 1200	UXGA_60	60.000	75.000	162.000
640x480@60Hz	Mac G4	59.940	31.469	25.170
640x480@67Hz	MAC13	66.667	35.000	30.240
800x600@60Hz	Mac G4	60.317	37.879	40.000
1024x768@60Hz	Mac G4	60.004	48.363	65.000
1024x768@75Hz	MAC19	75.020	60.241	80.000
1152x870@75Hz	MAC21	75.061	68.681	100.00
1280 x 768	WXGA_60	59.870	47.776	79.500
	WXGA_75	74.893	60.289	102.250
	WXGA_85	84.837	68.633	117.500
1280 x 720	WXGA_60	60.000	45.000	74.250
1280 x 800	WXGA_60	59.810	49.702	83.500
1280 x 800 (for P1340W/X1340WH/ H6510BD)	WXGA_120	119.909	101.563	146.25
1440 x 900	WXGA+_60	59.887	55.935	106.500
1680 x 1050	1680x1050_60	59.954	65.290	146.250
1920 x1080	1920x1080-RB	60.000	66.600	138.500
1920 x1080	1920x1080-EIA	60.000	67.500	148.500
1366 x 768	acer_16:9	59.790	47.712	85.500
1024 x 600	acer_timing	60.000	37.500	50.400
1920 x 1200 (for P1340W/X1340WH/ H6510BD)	1920x1200-RB	59.950	74.038	154.000

YPbPr support timing is as following:

Signal format	fh(kHz)	fv(Hz)
480i(525i)@60Hz	15.73	59.94
480p(525p)@60Hz	31.47	59.94
576i(625i)@50Hz	15.63	50.00
576p(625p)@50Hz	31.25	50.00
720p(750p)@60Hz	45.00	60.00
720p(750p)@50Hz	37.50	50.00
1080i(1125i)@60Hz	33.75	60.00
1080i(1125i)@50Hz	28.13	50.00
1080P@60HZ	67.5	60.00
1080P@50Hz	56.26	50.00
1080P@24Hz	27.00	24.00
1080P@23.98Hz	26.97	23.98

Video, S-Video support timing is as following:

Video mode	fh(kHz)	fv(Hz)	fsc(MHz)
NTSC	15.73	60	3.58
PAL	15.63	50	4.43
SECAM	15.63	50	4.25 or 4.41
PAL-M	15.73	60	3.58
PAL-N	15.63	50	3.58
PAL-60	15.73	60	4.43
NTSC4.43	15.73	60	4.43

The DVI_D & HDMI (HDCP) Established timing is as following: (for P1340W/X1340WH/H6510BD)

Resolution	Mode	Refresh rate(Hz)	H-frequency(kHz)	Clock(MHz)
640 x 480	VGA_60	59.940	31.469	25.175
	VGA_72	72.809	37.861	31.500
	VGA_75	75.000	37.500	31.500
	VGA_85	85.008	43.269	36.000
	VGA_120	119.518	61.910	52.500
800 x 600	SVGA_56	56.250	35.156	36.000
	SVGA_60	60.317	37.879	40.000
	SVGA_72	72.188	48.077	50.000
	SVGA_75	75.000	46.875	49.500
	SVGA_85	85.061	53.674	56.250
	SVGA_120	119.854	77.425	83.000
1024 x 768	XGA_60	60.004	48.363	65.000
	XGA_70	70.069	56.476	75.000
	XGA_75	75.029	60.023	78.750
	XGA_120	119.804	98.958	137.750
1152 x 864	SXGA_75	75.000	67.500	108.000
	SXGA_85	84.990	77.094	121.500
1280 x 1024	SXGA_60	60.020	63.981	108.000
	SXGA_72	72.000	76.970	134.600
	SXGA_75	75.025	79.976	135.000
	SXGA_85	85.024	91.146	157.500
1280 x 960	QuadVGA_75	75.000	75.000	126.000
1400 x 1050	SXGA+_60	59.978	65.317	121.750
1600 x 1200	UXGA_60	60.000	75.000	162.000
640x480@60Hz	Mac G4	59.940	31.469	25.170
640x480@67Hz	MAC13	66.667	35.000	30.240
800x600@60Hz	Mac G4	60.317	37.879	40.000

1024x768@60Hz	Mac G4	60.004	48.363	65.000
1024x768@75Hz	MAC19	75.020	60.241	80.000
1152x870@75Hz	MAC21	75.061	68.681	100.00
1280 x 768	WXGA_60	59.870	47.776	79.500
	WXGA_75	74.893	60.289	102.250
	WXGA_85	84.837	68.633	117.500
1280 x 720	WXGA_60	60.000	45.000	74.250
1280 x 800	WXGA_60	59.810	49.702	83.500
1280 x 800	WXGA_120	119.909	101.563	146.25
1440 x 900	WXGA+_60	59.887	55.935	106.500
1680 x 1050	1680x1050_60	59.954	65.290	146.250
1366 x 768	acer_16:9	59.790	47.712	85.500
1920 x1080	1920x1080_RB	60.000	66.587	138.500
1920 x1080	1920x1080_EIA	60.000	67.500	148.500
1024 x 600	acer_timing	60.000	37.500	50.400
1920 x 1200	1920x1200-RB	59.950	74.038	154.000
Vedio(HDMI)	480i	60	15.73	27.000
	480p	60	31.47	27
	576i	50	15.63	27.000
	576p	50	31.25	27.000
	720p_60	60	45.00	74.25
	720p_50	50	37.50	74.25
	1080i_60	60	33.75	74.25
	1080i_50	50	28.13	74.25
	1080p	60	67.5	148.5
	1080p	50	56.26	148.5
	1080p	24	27.00	74.25
	1080p	23.98	26.97	74.175

Characteristics of inputs/outputs

Signal	Parameter	Min	Type	Max	
RDATA GDATA BDATA	Impedance		75		Ohm
	Amplitude		0.7		Volts peak-to-peak
	Black pedestal		0		Volts
	Pixel Clock		165		M Hz
GDATA_SOG	Impedance		75		Ohm
	Amplitude		1		Volts peak-to-peak
	Video amplitude		0.7		Volts peak-to-peak
	Sync amplitude		0.3		Volts peak-to-peak
	Black pedestal		0		Volts
	Pixel Clock		165		M Hz
HDATA	Impedance		1		K ohm
	Amplitude, low level	0		0.8	Volt
	Amplitude, high level	2.5		5	Volt
	Frequency	31		99	K Hz
VDATA	Impedance		1		K ohm
	Amplitude, low level	0		0.8	Volt
	Amplitude, high level	2.5		5	Volt
	Frequency	48		120	Hz
SDADATA	Amplitude, low level	0		0.8	Volt
	Amplitude, high level	3		5	Volt
SCLDATA	Amplitude, low level	0		0.8	Volt
	Amplitude, high level	3		5	Volt
RXD	Amplitude	-25		25	Volt
TXD	Amplitude	-13.2		13.2	Volt

CVBS Luminance	Amplitude, total (video+ sync)		1		Volts peak to peak
	Amplitude, video		0.7		Volts peak to peak
	Amplitude, sync		0.3		Volts peak to peak
	Impedance		75		ohm
CVBS Chroma	Amplitude		700		m Volts peak to peak
	Impedance		75		ohm
Audio **(for X1140A/X1240/ P1340W/X1340WH/ H6510BD)**	Impedance (audio in)		10		K ohm
	Amplitude (audio in)	0		500	m Volt rms
	Bandwidth	300Hz		16kHz	
	S/N Ratio	40			dB
	Total Harmonic Distortion			10	%

1. Electrical Interface Character

Interface Definition：

- 15 pin definition of the mini D-sub male for DDC2B protocol

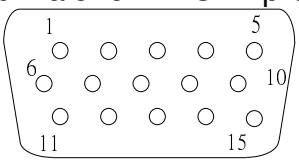

Pin	Definition	Pin	Definition	Pin	Definition	Pin	Definition	Pin	Definition
1	Red (Pr)	2	Green (Y)	3	Blue (Pb)	4	NC	5	NC
6	Red return	7	Green return	8	Blue return	9	DDCP 5V	10	GND
11	GND	12	SDA	13	H-sync	14	V-sync	15	SCL

- Video Input

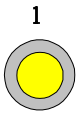

Composite input

Pin	Definition
1	Composite video input

- S-Video input

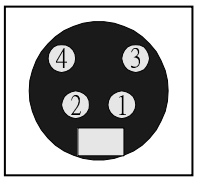

Pin	Definition
1	GND
2	GND
3	Luminance
4	Chroma

- RS232 Control Port

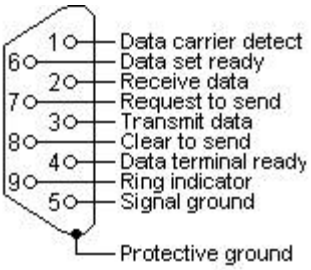

Pin	Definition	Pin	Definition
1	NC	2	RX
3	TX	4	NC
5	GND	6	NC
7	RTSZ	8	CTSZ
9	NC		

- Mini USB TYPE B

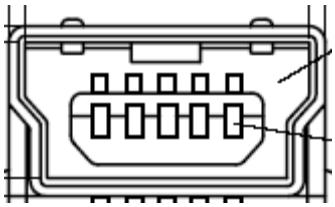

Pin	Definition
1	Vbus
2	D-
3	D+
4	ID
5	GND

- HDMI/DVI Input (for P1340W/X1340WH/H6510BD)

Pin	Signal
1	TMDS Data2+
2	TMDS Data2 Shield
3	TMDS Data2–
4	TMDS Data1+
5	TMDS Data1 Shield
6	TMDS Data1–
7	TMDS Data0+
8	TMDS Data0 Shield
9	TMDS Data0–
10	TMDS Clock+
11	TMDS Clock Shield
12	TMDS Clock–
13	CEC
14	Reserved (N.C. on device)
15	SCL
16	SDA
17	DDC/CEC Ground
18	+5 V Power (max 50 mA)
19	Hot Plug Detect

3. Functionality

External Message indicator

Message	Occasion
D-sub /Composite Video /S-Video Searching	The system does not detect the signal
Input Not Supported	The signal is over the specification
Lamp is approaching the end of its useful life in full power operation. Replacement suggested!	**X1140A/X1240/X1140/P1340W/X1340WH :** Lamp Hour is at **4470** hours **H6510BD :** Lamp Hour is at **3970** hours

Power Supply Specification

1. Input Power Specification

Specification	Description
Input Voltage Range	The unit shall meet all the operating requirements with the range 90 ~ 264 VAC
Frequency Range	The unit shall meet all the operating requirements with an input frequency range 47 Hz ~ 63 Hz
Power Consumption	**X1140A/X1240/X1140 :** Normal operation: 250W (Max) **P1340W/X1340WH :** Normal operation: 285W (Max) **H6510BD :** Normal operation: 290W (Max) standby mode: < 0.5W (VGA out loop through, LAN control, audio out are disabled), at 100~240VAC
Regulation Efficiency	85 % (typical) measuring at 115Vac and full load

1. Output Power Requirement

The power supply can provide DC 12V output as below：

NO.	Voltage	Regulation	Load Current Range	Ripple & Noise
1	+12 V	±10 %	0 A ~ 2 A	120mV/240 mV
2	+3.3 V	±5 %	0.04 A ~ 0.15 A	40mV/120 mV

The power supply can provide DC 380V output as below：

NO.	Voltage	Range	Load Current	
1	380 V	360~400V	0.5 A TYP.	

2. Lamp Power specifications

Specification	Description
Applicable Lamp	**X1140A/X1240/X1140/P1340W/X1340WH :** Osram Normal 190W, ECO 160W AC operation **H6510BD :**Osram Normal 210W, ECO 160W AC operation
Starting pulse from Ignitor	3.5KV

3. Power Protection

Item	Criteria
Short protection	No damage
OVP	16Vdc Max@12V 5Vdc Max@3.3V
OPP	DC-DC 130~250% PFC 130~160%

4. **Surge test: Meet EN61000-4-5**
   L ←→N 1KV, L, N ←→PE 2KV, Criteria B

5. **Electrical Fast Transients (EFT):Meet EN61000-4-4**
   1 KV, Criteria B

6. **Voltage Dips: Meet EN61000-4-11**
   >95% reduction for 0.5 periods, Criteria B

7. **Harmonic current test: Meet EN61000-3-2**

8. **Power BD Key Component List**

Constructional data form for electrical appliances	
Object/part No.	Technical data
Bridge Diode (BD601)	600V, 4A minimum
Storage capacitor (C619)	150μF , 450V 105℃ minimum
Transistor (Q621)	600V,17A minimum

9. **Ballast Data**

Symbol	**Parameter**	**Conditions**	**Min.**	**Typ.**	**Max.**	**Unit**
Osram lamp	Output lamp power		184	**X1140A/X1240/ X1140/P1340W/X1340WH:** 190 **H6510BD :** 210	196	W
Vpi	Input Voltage	DC operating	320	380	400	V
	Input voltage for max 0.5 sec	In stand-by mode an overshoot of max. 420V and max. 500ms			420	V

System Block Diagram

For X1140A/X1240/X1140:

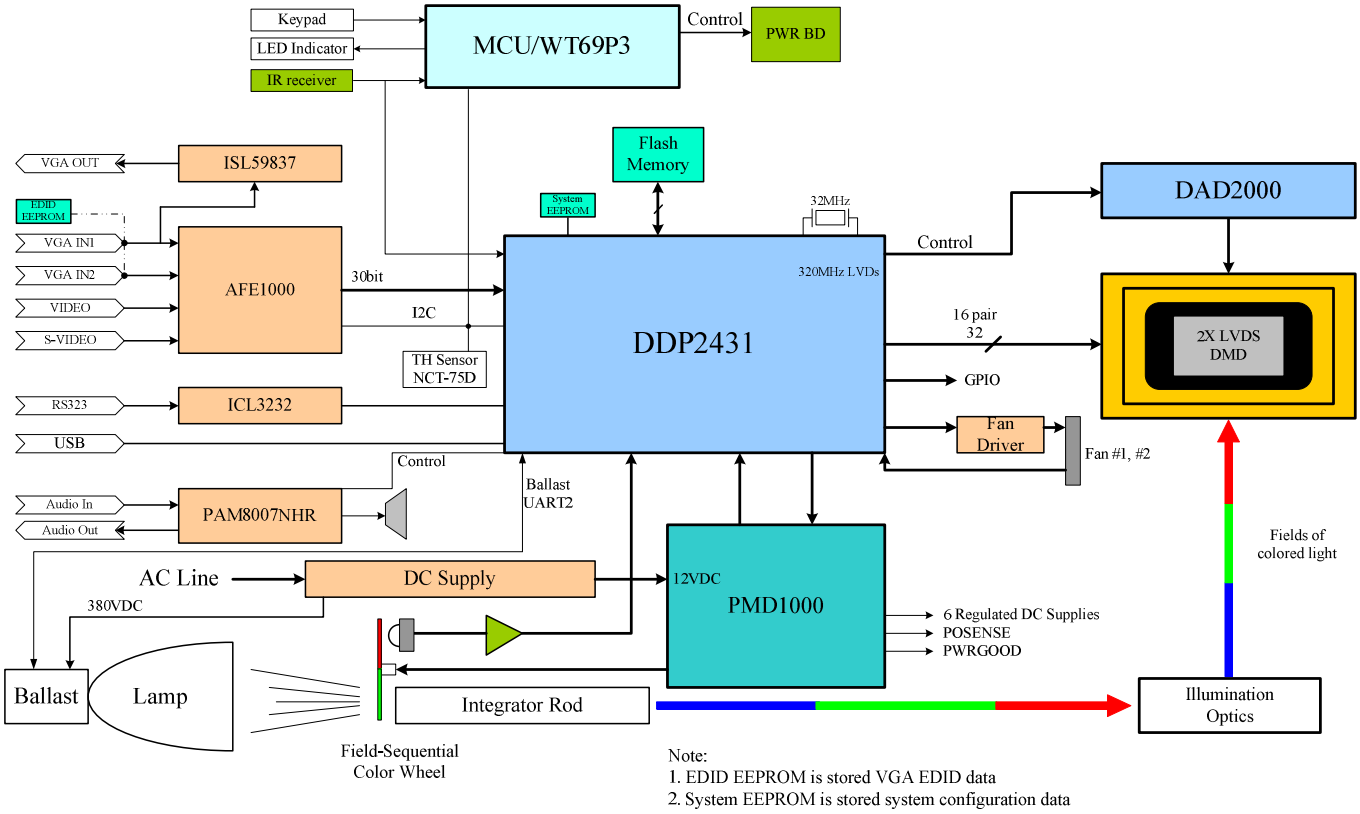

Note:
1. EDID EEPROM is stored VGA EDID data
2. System EEPROM is stored system configuration data

For P1340W/X1340WH:

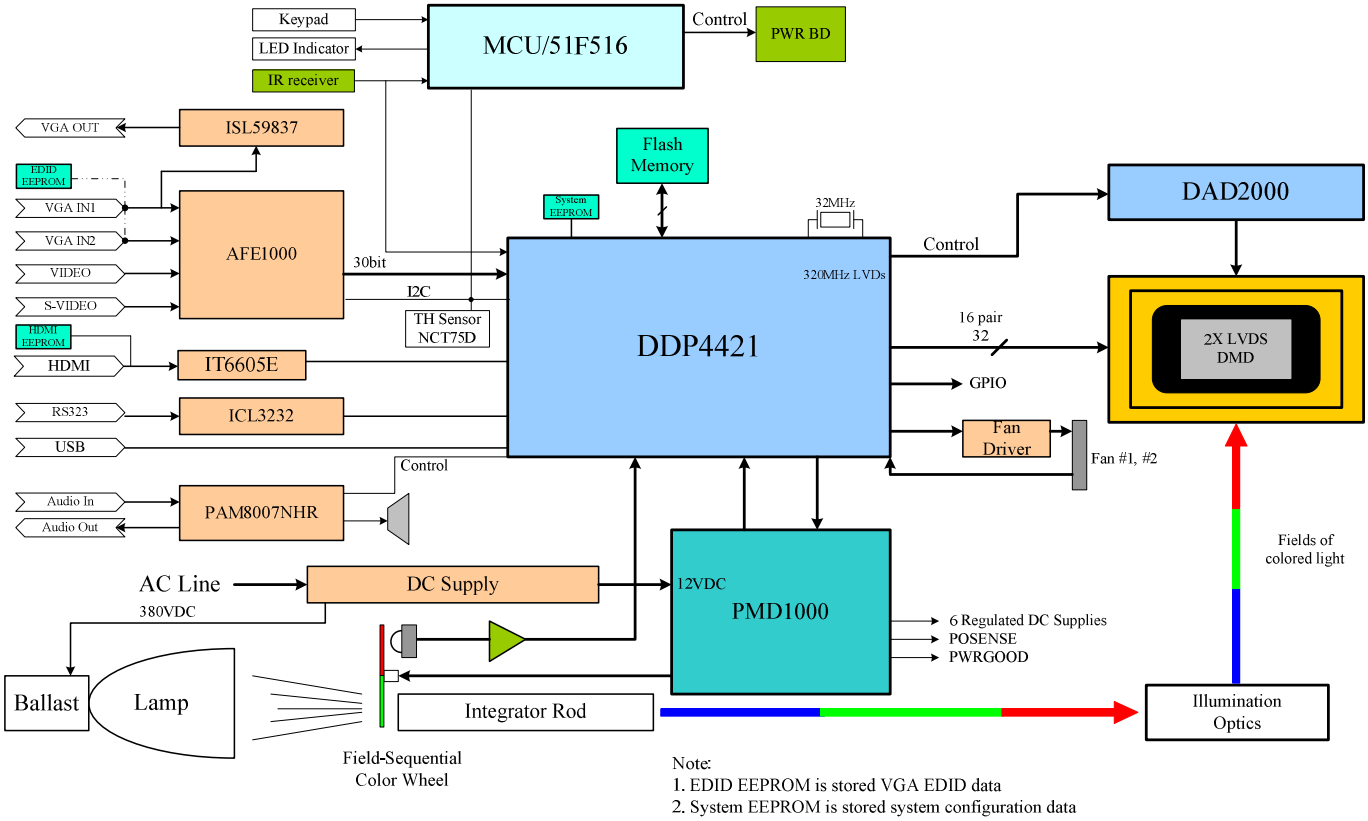

Note:
1. EDID EEPROM is stored VGA EDID data
2. System EEPROM is stored system configuration data

For H6510BD:

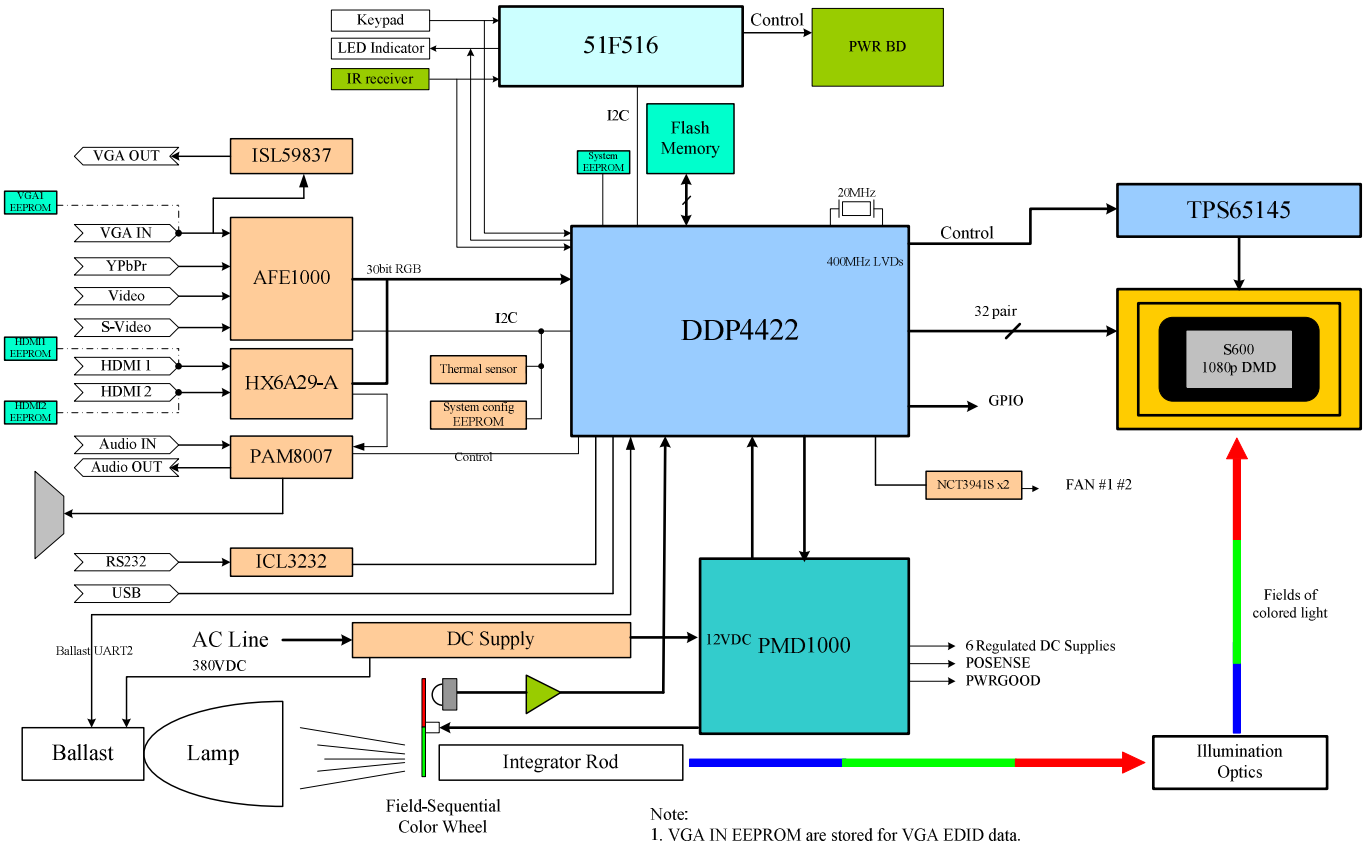

Note:
1. VGA IN EEPROM are stored for VGA EDID data.
2. HDMI1&HDMI2 EEPROM is stored for HDMI1&HDMI2 EDID data.
3. System config EEPROM is stored for Factory mode alignment data.

Product Overview

Projector Outlook

Front/upper side

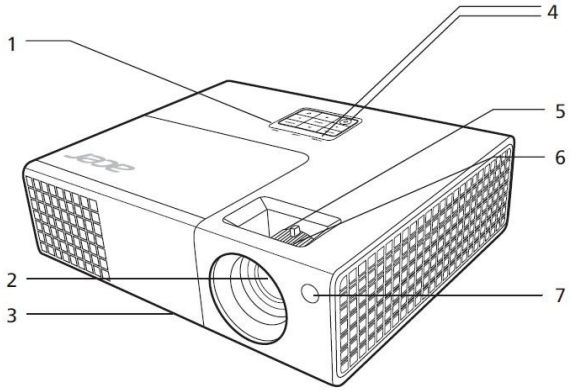

#	Description	#	Description
1	Control panel	5	Zoom ring
2	Projection lens	6	Focus ring
3	Tilt adjusting wheel	7	Remote control receiver
4	Power key and Power indicator LED		

Rear side

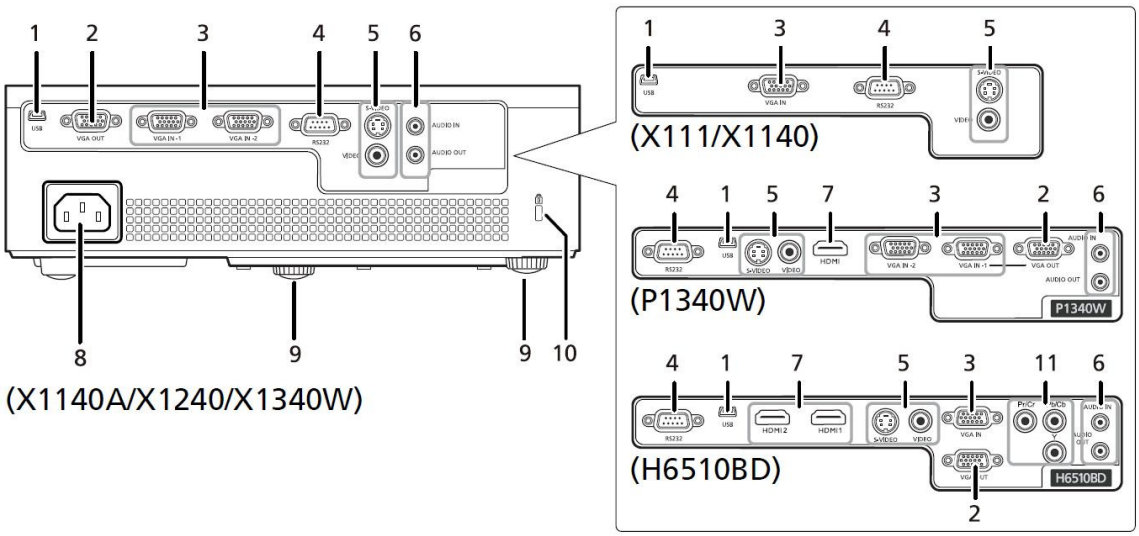

#	Description	#	Description
1	Mini USB connector	7	HDMI connector
2	Monitor loop-through output connector	8	Power socket
3	Analog RGB signal/HDTV/component video input connector	9	Tilt adjusting wheel
4	RS232 connector	10	Kensington™ lock port
5	S-Video input connector Composite video input connector	11	Component video input connector
6	Audio input connector Audio output connector		

Control Panel

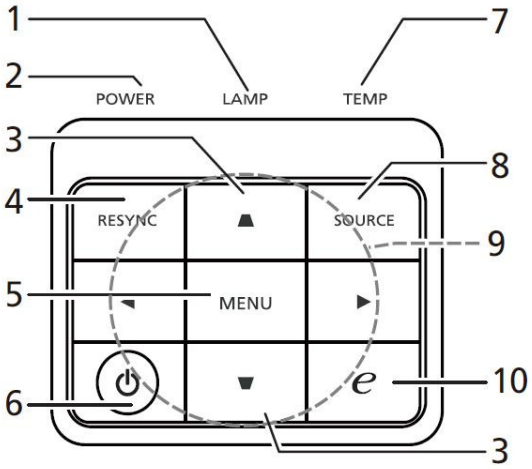

#	Function	Description
1	LAMP	Lamp Indicator LED.
2	POWER indicator LED	Refer to the "Turning the Projector On/Off" section.
3	Keystone	Adjusts image distortion caused by tilting projection (±40 degrees).
4	RESYNC	Automatically synchronizes the projector to the input source.
5	MENU	Launches the Onscreen Display (OSD) menu, returns to the previous step for the OSD menu operation or exits the OSD menu.
6	Power key	Refer to the "Turning the Projector On/Off" section.
7	TEMP	Temp Indicator LED.
8	SOURCE	Chooses RGB, component video, S-Video, composite video, HDMI or HDTV source.
9	Four directional selection keys	Selects items or makes adjustments to your selection
10	Empowering key	Enables unique Acer functions: eView, eTimer, ePower Management, e3D.

Remote Control Layout

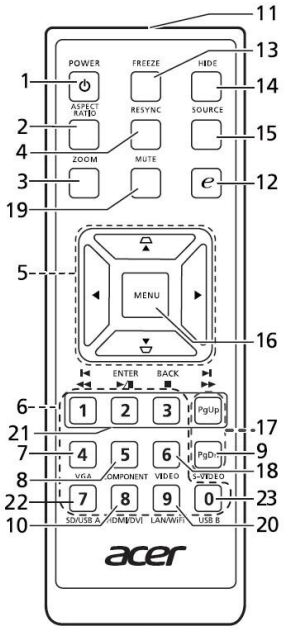

X111/X1140/X1140A/X1240/
X1340W/P1340W

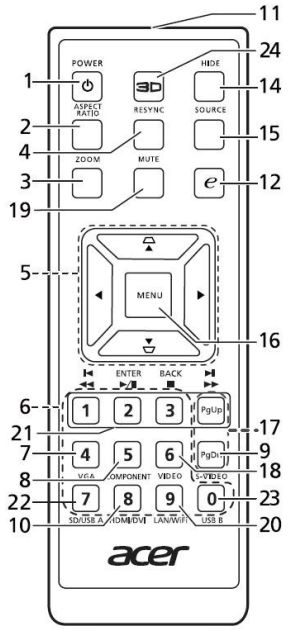

H6510BD

#	Function	Description
1	POWER	Refer to the "Turning the Projector On/Off" section.
2	ASPECT RATIO	To choose the desired aspect ratio.
3	ZOOM	Zooms the projector display in or out.
4	RESYNC	Automatically synchronizes the projector to the input source.
5	Keystone	Adjusts image distortion caused by tilting projection (±40 degrees).
	Four directional selection keys	Selects items or makes adjustments to your selection.
6	Keypad 0~9	Press "**0~9**" to input a password in the "Setting" > "Security" OSD.
7	VGA	To change source to VGA. This connection supports analog RGB, YPbPr (480p/576p/720p/1080i/1080p), and YCbCr (480i/576i).
8	COMPONENT	To change source to component video. (YPbPr 480p/576p/720p/1080i/1080p and YCbCr 480i/576i)
9	S-VIDEO	To change source to S-Video.
10	HDMI™; HDMI™/DVI	To change source to HDMI™ (or DVI). (P1340W/H6510BD only)
11	Infrared transmitter	Sends signals to the projector.

#	Function	Description
10	HDMI™; HDMI™/DVI	To change source to HDMI™ (or DVI). (P1340W/ H6510BD only)
11	Infrared transmitter	Sends signals to the projector.
12	Empowering key	Enables unique Acer functions: eView, eTimer, ePower Management, e3D.
13	FREEZE	To pause the screen image.
14	HIDE	Press "HIDE" to hide screen image; press again to display the image.
15	SOURCE	• Chooses RGB, component video, S-Video, composite video, HDMI or HDTV source. (X111/ X1140/X1140A/X1240/X1340W/P1340W) • Press to open the Source menu that allows you to select an input signal source. (H6510BD) 
16	MENU	Launches the Onscreen Display (OSD) menu, returns to the previous step for the OSD menu operation or exits the OSD menu.
17	PgUp/PgDn	For computer mode only. Use this button to select the next or previous page. This function is only available when connected to a computer via a USB cable.
18	VIDEO	To change source to composite video.
19	MUTE	To turn on/off the volume.
20	WIRELESS; LAN/WiFi	(No function)
21	⏮ Rewind ⏯ Play/Pause ■ Stop ⏭ Fast-forward	(No function)
22	SD/USB A	(No function)
23	USB B	(No function)
24	3D	Press to open the 3D menu for adjusting 3D settings. 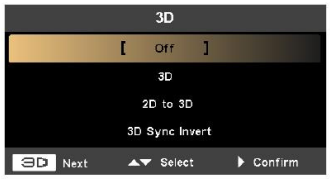

(X111/X1140/X1140A/X1240)

(X1340W/P1340W)

(H6510BD)

Firmware Upgrade SOP

Basic Operating

- **Low-Power Standby Mode：**

  This mode is applied for normal situation. If you want to enter this mode, you could just plug in power cord. Power LED, Lamp LED, Temp LED will show Red for 1 sec, then Power LED will show Red.

  When the Power LED, Lamp LED, Temp LED show Red, it means system is not ready for low-power standby. In another word, if only power LED shows Red, it means system is in low-power standby mode and the whole system is not supported by power except MCU and its related circuits. Meanwhile, the power consumption should under 0.5W.

Standby Mode

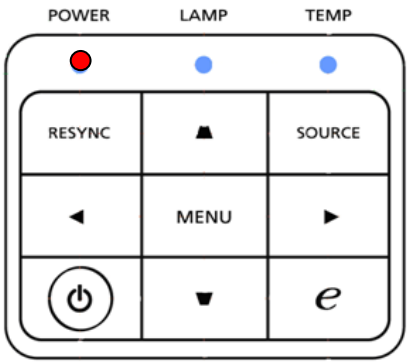

- **Download Mode：**

  This mode is applied for Download firmware, you can use USB or RS232 cable in the download mode.

  One method to enter this mode is that you should press and hold keypad **Power and Menu** together, then plug in power cord. **Release the two keypads until the Power, Lamp and Temp LED show Red continuously.**

  ➢ **System will enter baud rate 115200 mode**

  The default baud rate is 9600. This mode can change baud rate to 115200.

Download Mode

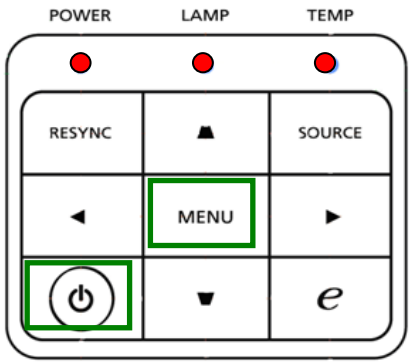

- **Full-Power Standby Mode：**

  You should press and hold keypad **Power and Source** together, then plug in power cord. **Release the two keypads until the Power LED show Red continuously.**

  The other method is to type RS-232 Command：
  <CR>*Stby=H#<CR>

  In full-power standby mode, system will be supported by full power but not turn on projector. You can use DLP composer and communicate with DLP ASIC. Thus, you should download firmware in this mode.

Full-Power Standby Mode

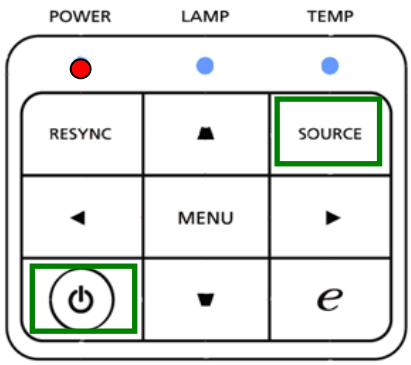

  ➢ **System will enter EDID Write mode**

  Plug in D-sub cable to write D-sub EDID by EDID read/write tool.
  X1140A and X1240 only need to write one of the two D-sub ports.

  ➢ **System will enter baud rate 115200 mode**

  The default baud rate is 9600. This mode can change baud rate to 115200.

● Download MCU Code：(in Low-Power Standby)

For X1140A/X1240/X1140/H6510BD, MCU is WT69P3;
For P1340W/X1340WH, MCU is 51F516

Condition：

Situation 1：MCU code is empty (The 1st time to plug in power cord)
Situation 2：MCU version update

System Action：

System needs a few sec to download MCU itself.

Downloading：POWER and Temp LED will show red.
Download Success：System will go back Low-Power standby mode and Power LED will show red.

Download Fail: POWER and Lamp LED will show red.

Notice：

Do NOT interrupt power when downloading.

DLP Composer Lite Installation Process

(1) Installation

For X1140A/X1240/X1140, use DLP Composer Lite 9.0 or above version.
For P1340W/X1340WH/H6510BD, use DLP Composer Lite 11.0 or above version.
No matter which DLP composer Lite version is, the installation steps are the same.

1. Double click the Setup file for DLP Composer Lite 9.0 or above version.
2. When the Installation Wizard appears, click “Next”.

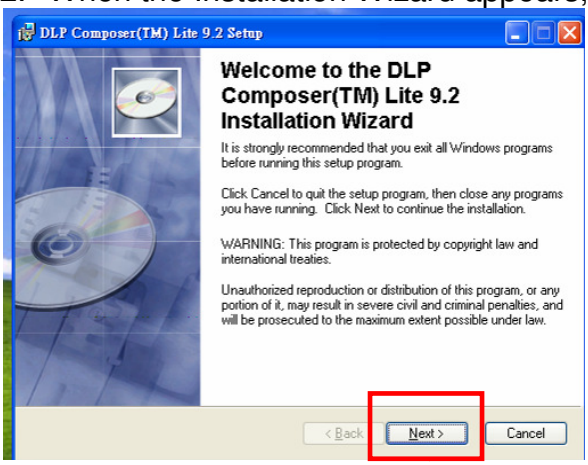

3. Select to accept the License Agreement, than click “Next”

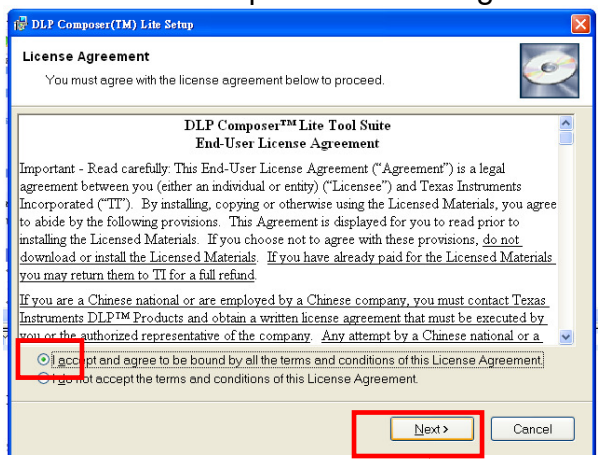

4. Click “Next” in the following steps to continue installation process.

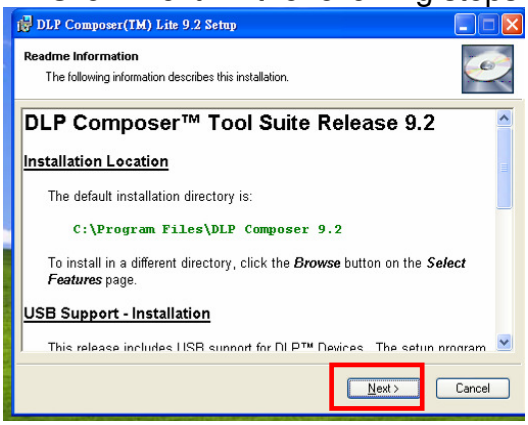

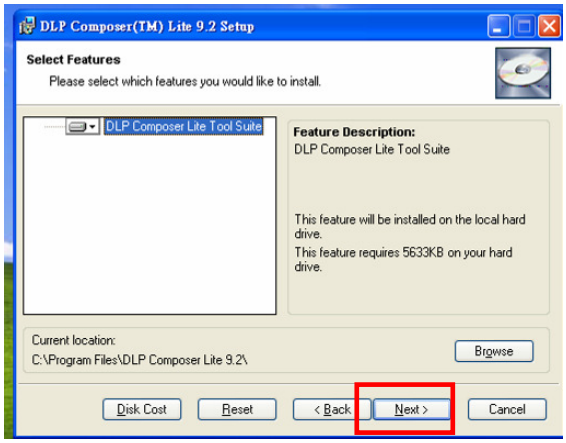

Note:
The default installation directory is:
C:\Program Files\DLP Composer Lite9.2
If you want to install to a different directory (perhaps alongside a prior release of DLP Composer™ Lite), click the "Browse" button on the "Select Features" page.

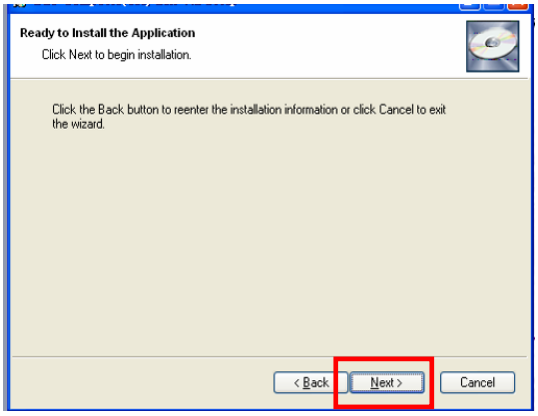

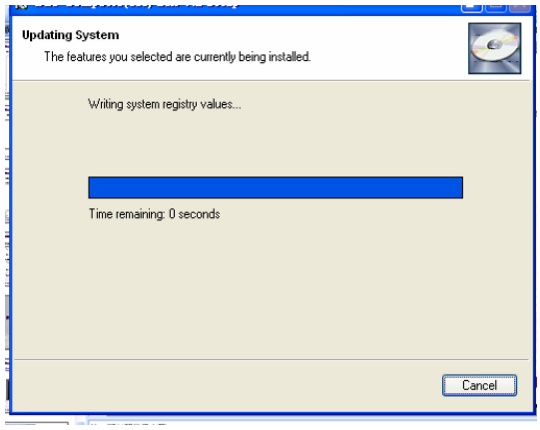

5. When finishing installation, click “Finish”, and then restart your computer to complete the installation process.

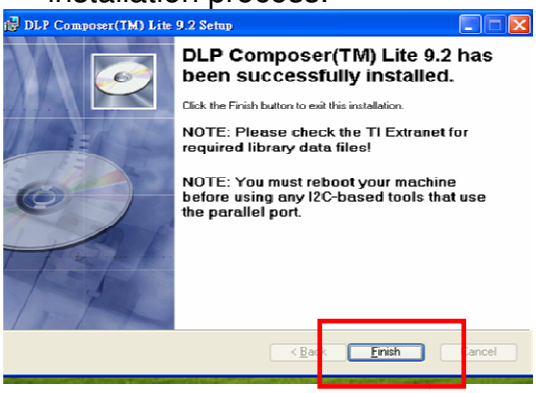

(2) Setting for your first use

- **Select Library: (For X1140A/X1240/X1140)**

1. Unzip “DDP243x_Download_Tool_ Ver1.4.rar” or later version to get the library.

2. When start to use this program to download at first time, you need to check if the library folder is existed under the path of Library (Click “Edit” →”Preferences”→ “Library”).

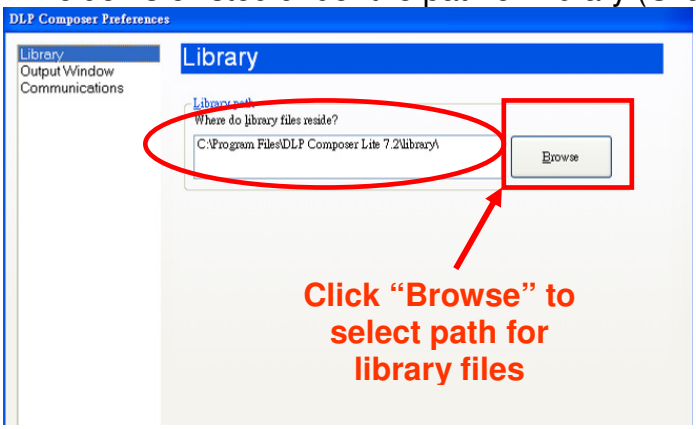

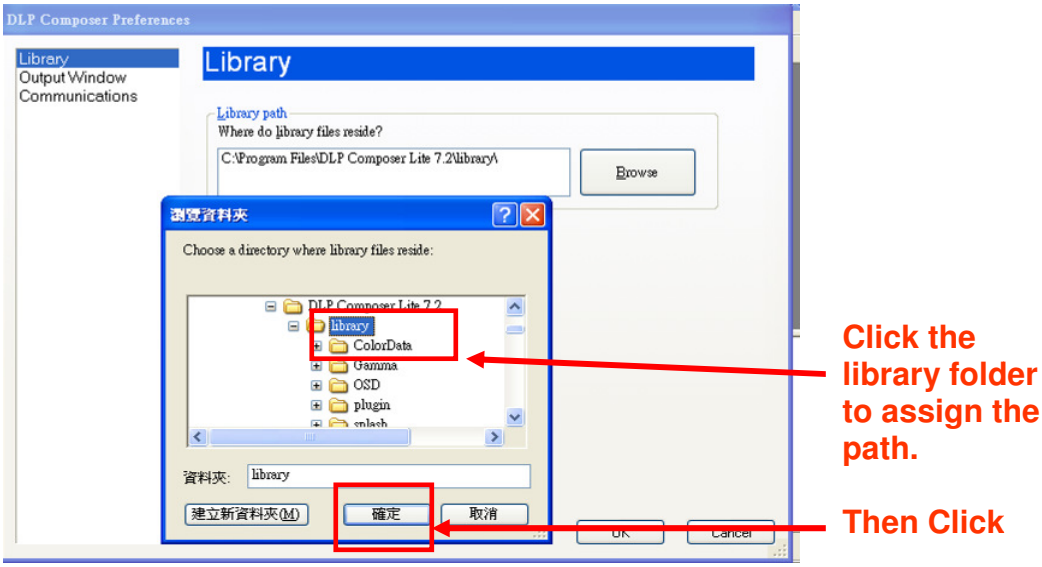

3. If the library files are not in the assigned path, save it into the path.

- **Select Library: (For P1340W/X1340WH/H6510BD)**

1. Unzip “DDP442X Download_Tool_Ver1.0.rar” or later version to get the file : “FlashDeviceParameters.txt”.

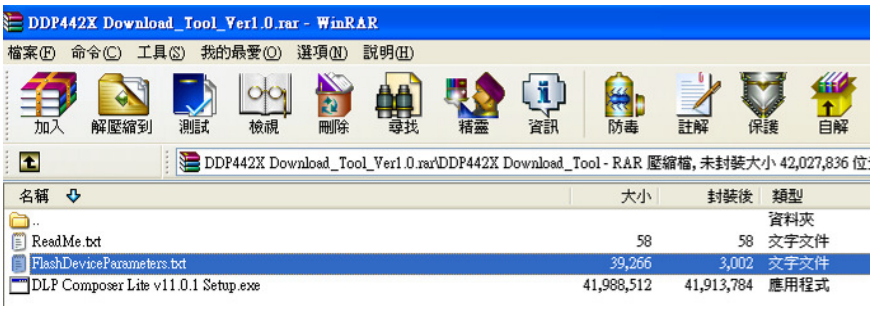

2. Save the “FlashDeviceParameters.txt” into the DLP Composer Lite11.0 installed folder.

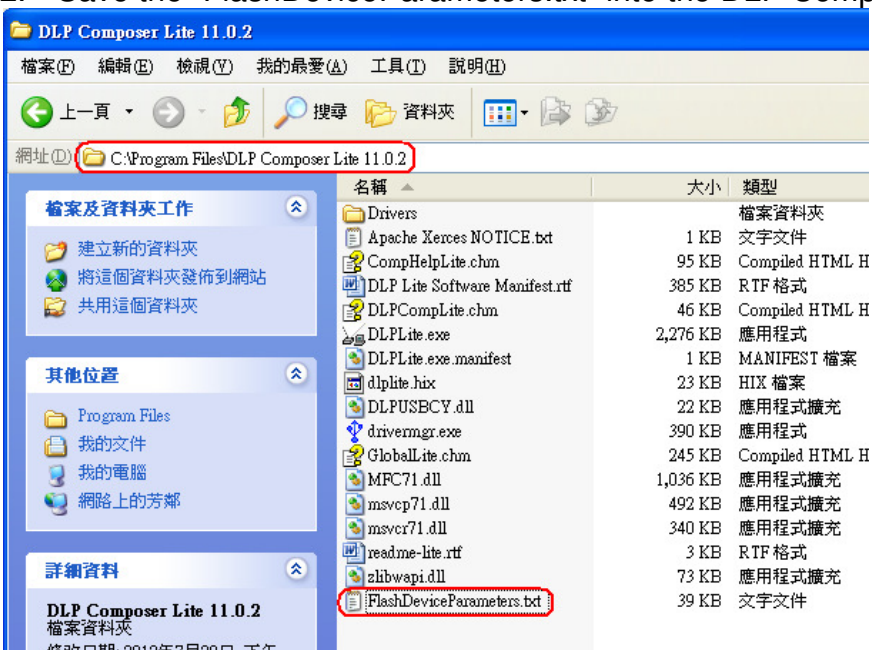

- **Set communication (for download by RS232):**

1. Select “Edit”->”Preference”.

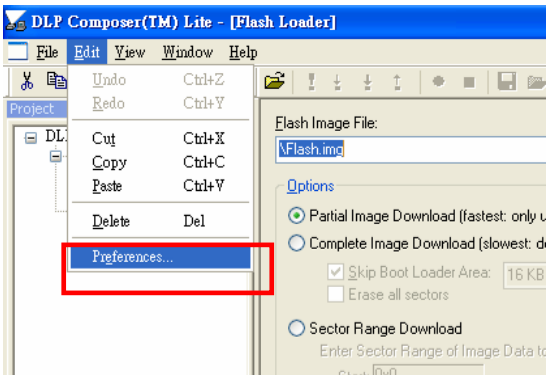

2. Select “Communications”-> “Serial Port” -> ”Config”.

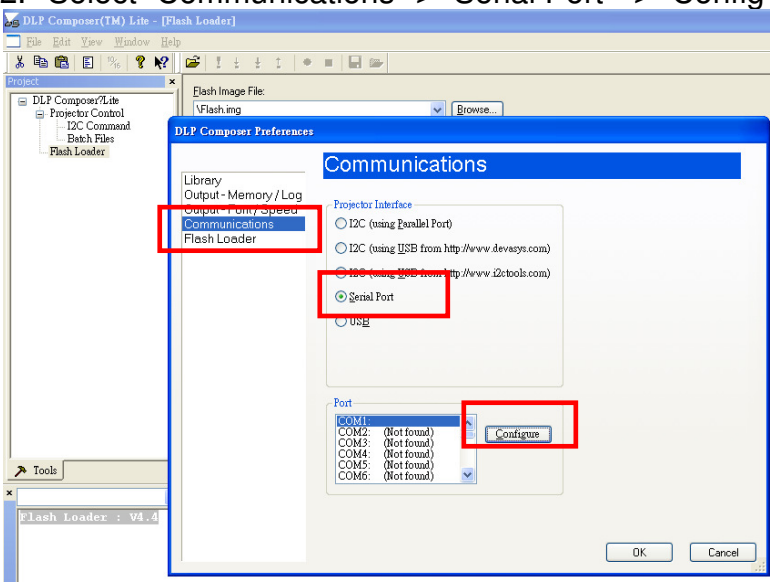

3. Make sure the settings are the same as below figure-> Click ”OK”.

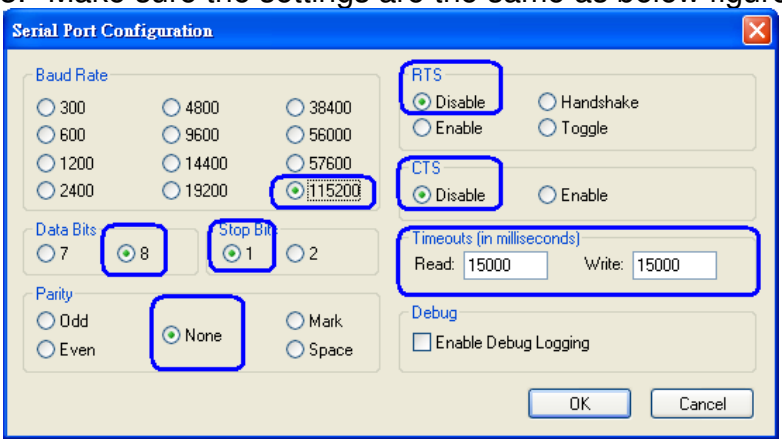

4. Click ”OK”.

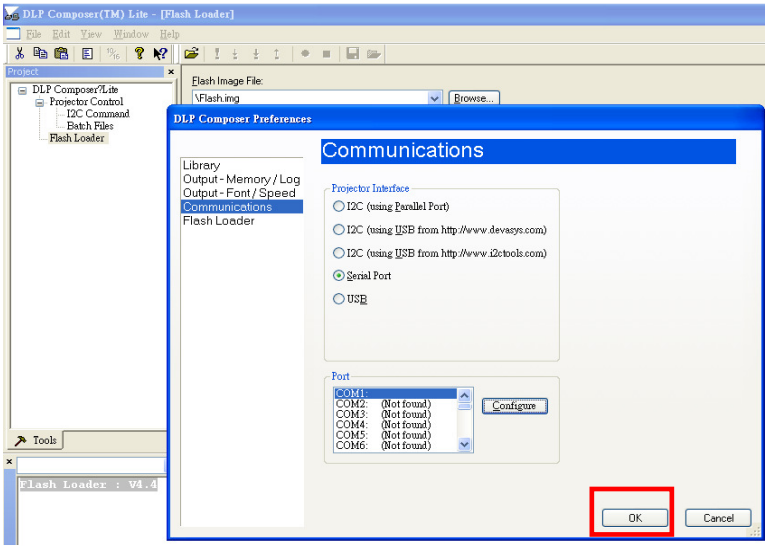

(1) Download Procedure

- **How to download**

Download Tools Required：

Software required：

1. DLP Composer Lite
   For X1140A/X1240/X1140, use DLP Composer Lite 9.0 or above version.
   For P1340W/X1340WH/H6510BD, use DLP Composer Lite 11.0 or above version.
2. New version image file (*.img)

Hardware required：

1. PC or Notebook：With RS-232 or USB Connection
2. USB Download cable: Mini USB download cable
   (optional: by RS232 Download cable：D-SUB 9pin female for both terminals.)

RS-232 Pin Assignment：

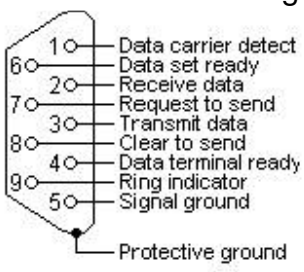

Pin	Definition	Pin	Definition
1	NC	2	RX
3	TX	4	NC
5	GND	6	NC
7	RTSZ	8	CTSZ
9	NC		

Firmware Download Procedure：

1. Connect RS-232 cable to PC and projector
2. Let projector be in **download mode**

LED：All LED will show red.

3. Launch “**DLP Composer Lite v*.***” program

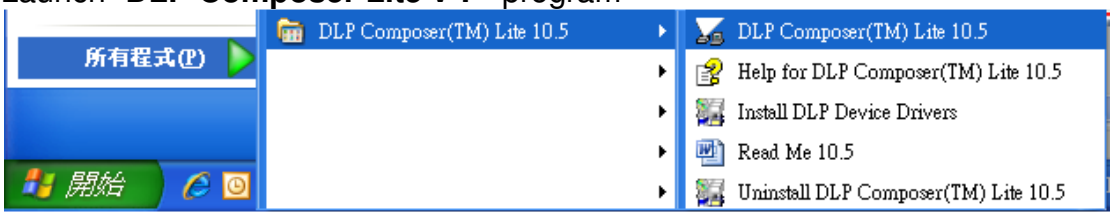

4. Check communication is “**USB**” or “**Serial Port**” (Depends on your download interface)

Choose "Preferences" from the "Edit" menu, click the "Communications" page and choose “USB” or "Serial Port". And you can now use DLP Composer™ Lite to communicate with a projector via RS-232 using the Flash Loader tool.

USB Mode:

- For X1140A/X1240/X1140:

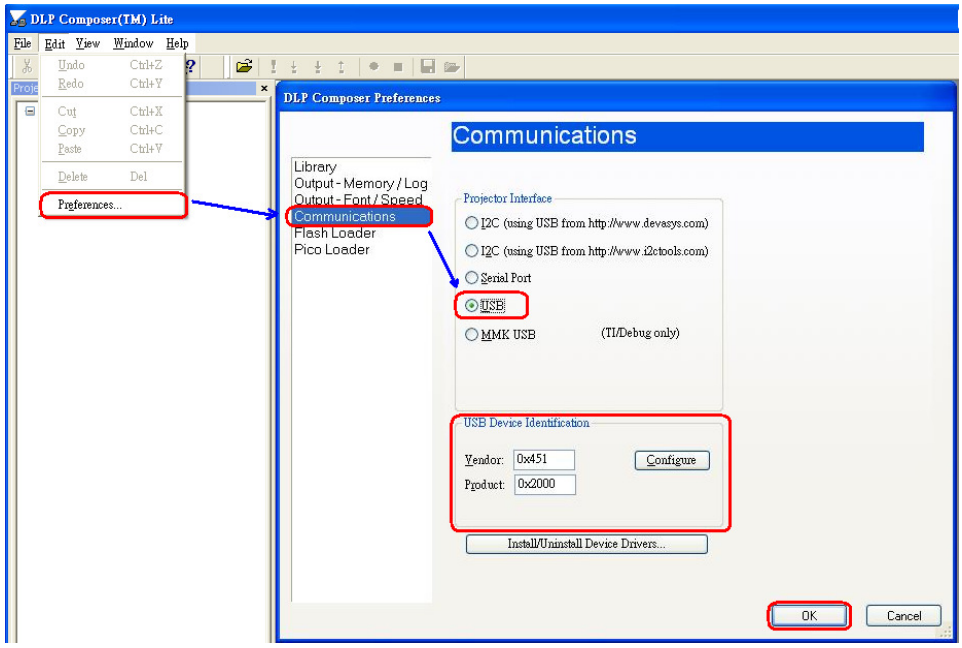

- For P1340W/X1340WH/H6510BD: (Product should be **0x4421**. If fill-in **0x2000**, you have to install USB driver before downloading. Install the driver from Star Menu->DLP Composer lte11->Install DLP Device Drivers->Microsoft WinUSB)

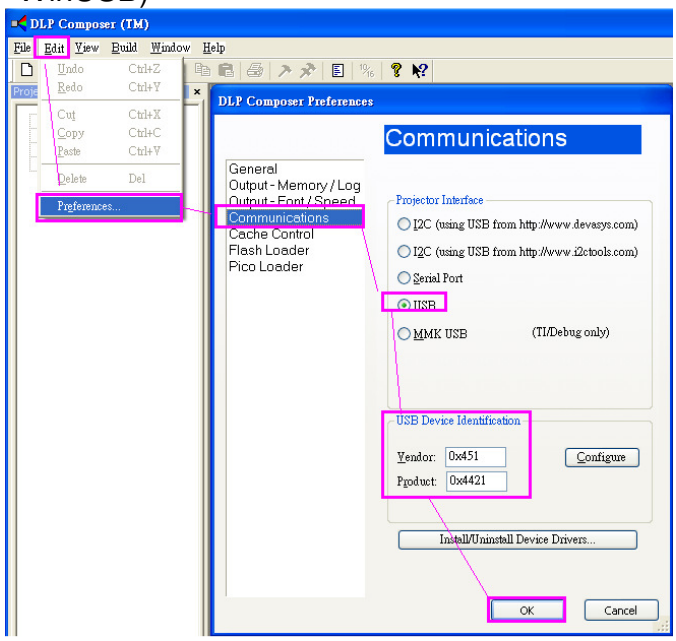

RS-232 Mode:

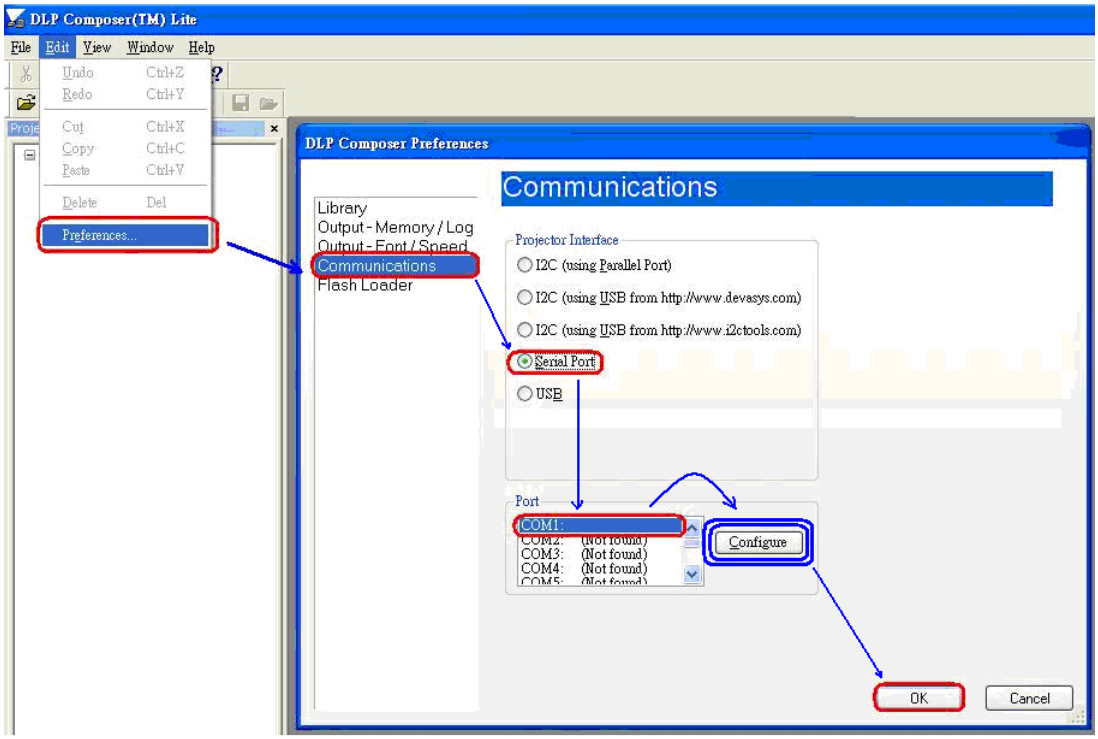

RS-232 Configure Setting:

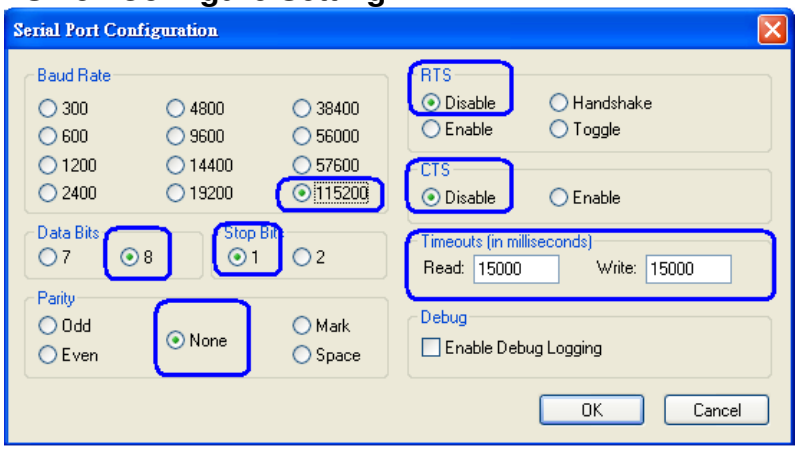

5. Select Flash Loader

a. Browse Flash Image File
b. Select Complete Image Download
c. Skip boot Loader Area：**32KB**

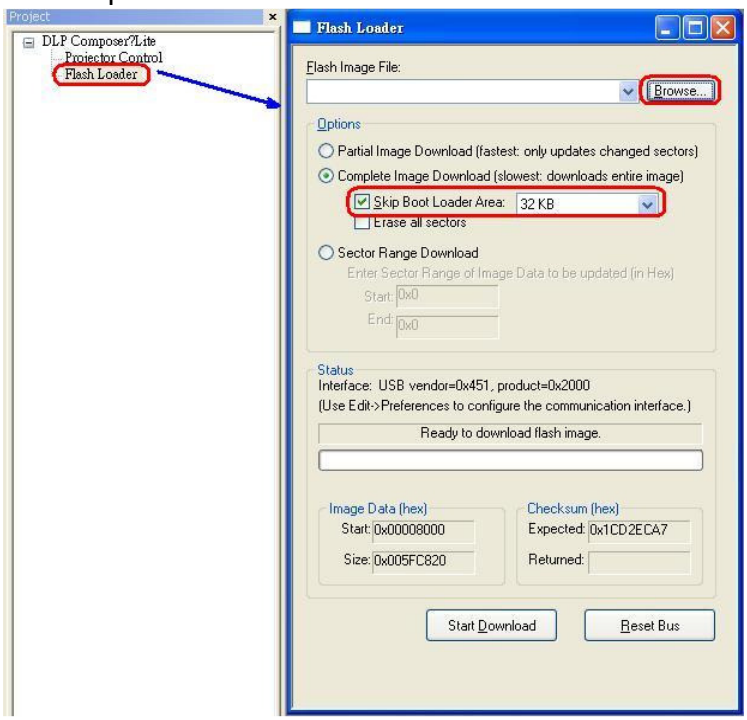

6. Reset Bus to ready download

a. Press “Reset Bus” and check the status which should show “Bus Reset”.
b. Press “Start Download” to start.
c. Press “Yes” to continue.

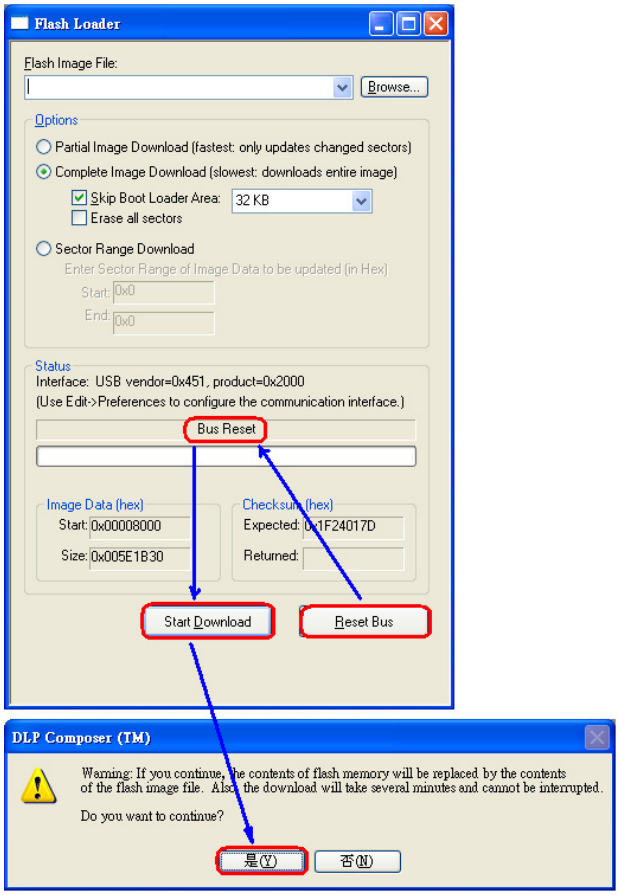

7. Download Complete

Check Status which should show “Download Complete.”

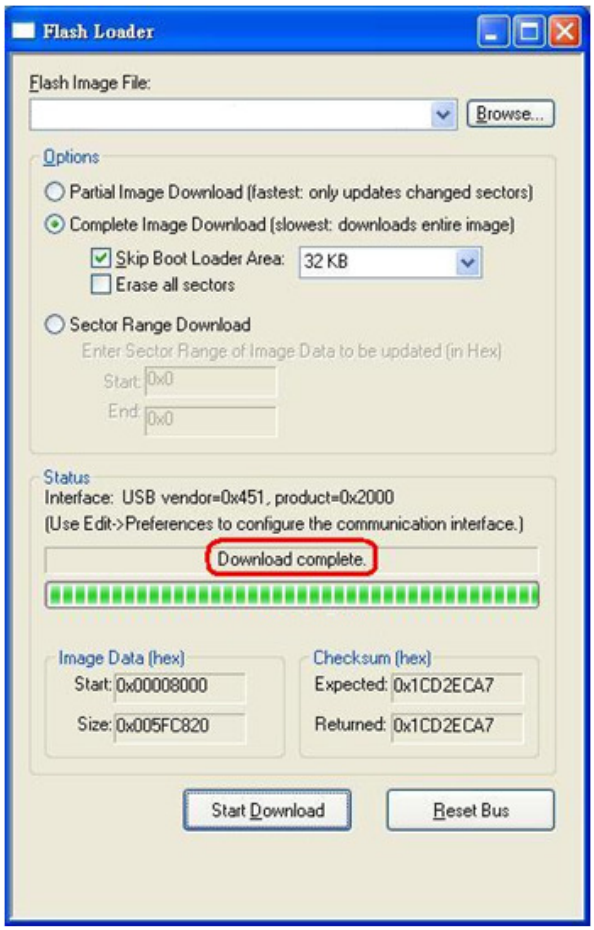

Method to Enter Factory Menu

1. Press keypad **Power** and image will show Power Down OSD function
2. Press keypad **Left** twice then press **Menu**, then enter the Factory mode.

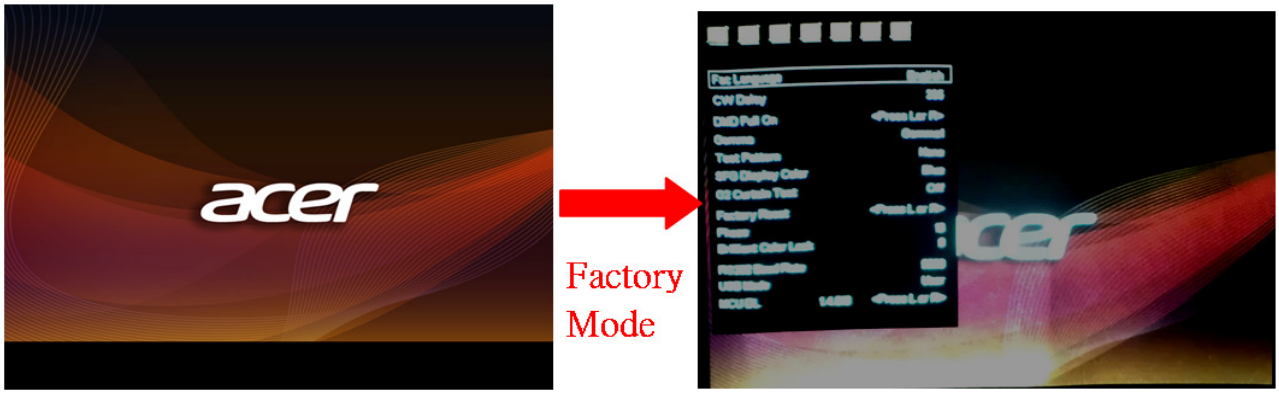

EDID Upgrade SOP

Equipment List

1. PC : with parallel (printer) port
2. EDID Board
3. Printer cable : 25pin male-female (connect PC to EDID board)
4. D-sub cable* : with full 15pin (connect EDID board to Projector)
5. HDMI cable*(connect EDID board to Projector)
6. DVI cable* (connect EDID board to Projector)

(*Note: Not every model's EDID input (D-sub, DVI, HDMI) is the same. Need to check what kind of file you need before download).

Setup Equipment

1. 1. Let projector be in **Full-power standby mode** (Press "**Power**" and "**Source**" and plug in power cord into Projector immediately.)
2. Connect between PC, EDID board and the Projector:

PC with parallel (printer) port

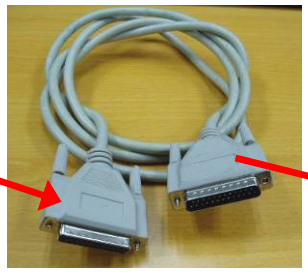

"25pin male-female cable" (normal printer cable)

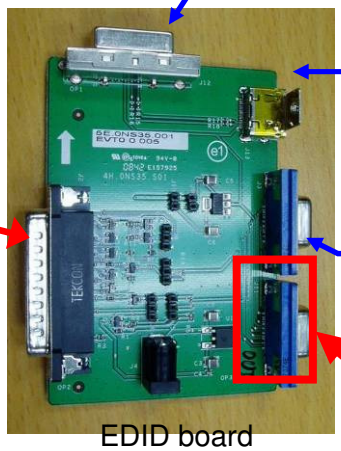

EDID board

Link to Projector: For DVI-D DDC download **(no need for X1140A, X1240,X1140, P1340W,X1340WH H6510BD)**

Link to Projector: For HDMI DDC download **(no need for X1140A, X1240,X1140)**

Please ignore this connector

Link to Main board: For D-sub DDC download

2. Need to set Jumper before using EDID board:

<Jumper setting :>

J6 : 1,2 short

J8 : 1,2 short

J10 : short

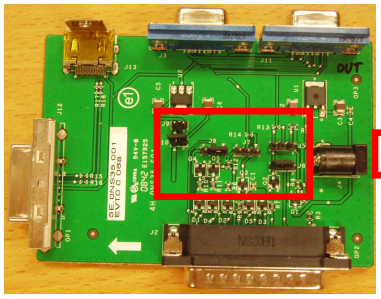

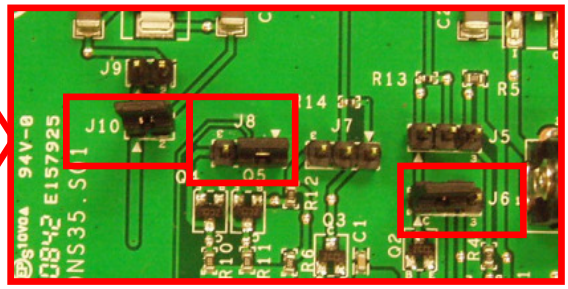

3. How to use Download Tool:

Software Installation, Un-installation:

- Unzip the “Q-EDID” program files in the same directory.
- Install Q-EDID tool: Execute “Install Q-EDID.BAT” to install & register EDID Board into the computer.

- Un-install Q-EDID tool: If you want to uninstall this tool, execute “Uninstall Q-EDID.BAT”, then it will remove EDID Board from the computer.

How to use Download Tool:

(1) Execute EDID Tools V0.16:

1. Run “Q-EDID-V016.exe”.

2. Program will appear as below picture.

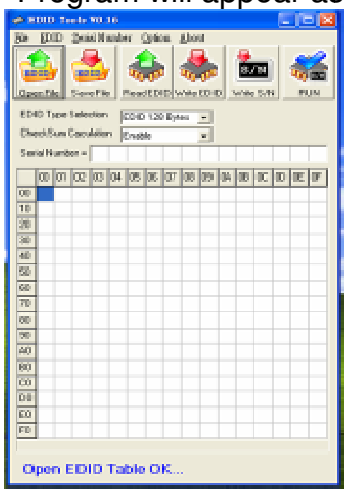

(2) Write EDID:

- **When write D-SUB/DVI EDID:**

1. EDID Type Selection: Choose “EDID 128 Bytes”.
2. Open Files : Click “Open File” to select file “*.DDC”
   (Note: If your DDC file name is not like “*.DDC” (e.g. “*.2dc”), please rename it to “*.DDC”)
3. Write EDID: Click “Write EDID”, and it will execute writing process.
4. While complete, it will show message as ”Write EDID OK…”.
   (Note: Check cable connection before write. It will show Write EDID OK even the connection is not stable.)

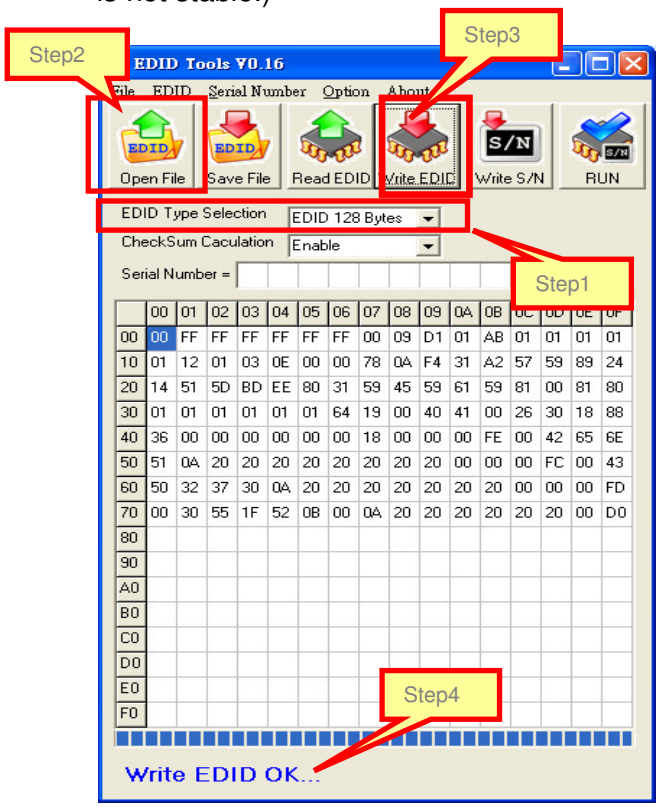

(3) Read EDID:

- **Read D-SUB/DVI EDID:**

1. EDID Type Selection : Choose “EDID 128 Bytes”
2. Read EDID : Click “Read EDID”.
3. While complete, it will show message” Read EDID OK… ‘’, and the read-out DDC will show in the table in program.

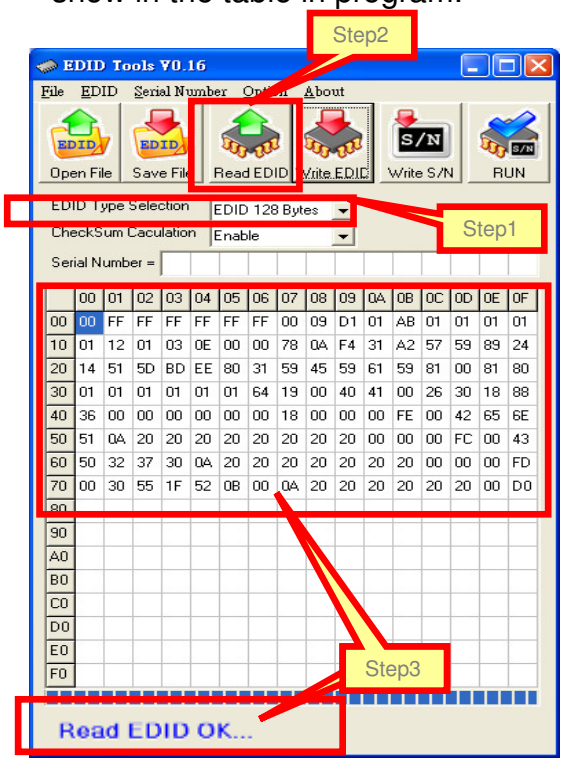

Important Note:

- Be reminded to connect Only One port every time, because the software will not be able to identify the command signal from which port.
- After connecting all equipment, always read DDC before writing DDC to ensure the connection status is OK for writing DDC.

Serial Number Upgrade SOP

Hardware required

1. Standard RS232 Download cable
2. Personal computer or laptop computer

Software required

1. Acer_Service_Tool(Data)_3.1.exe

When need to use this Serial Number Upgrade program:

When it's time to replace Main board for repair or download new FW if it will cause factory data reset, it's necessary to rewrite original S/N and some adjustment values into Main board by the following process.

Upgrade procedure

1. Prepare the download equipment: RS232 cable connect to PC and projector
2. Plug power cord into projector, and the projector will be in stand by mode. Let the projector in full standby mode.
3. Execute "Acer_Service_Tool(Data)_3.1.exe", and it will appear as below picture.
4. Change to connected COM port and Click "Port Open" icon.

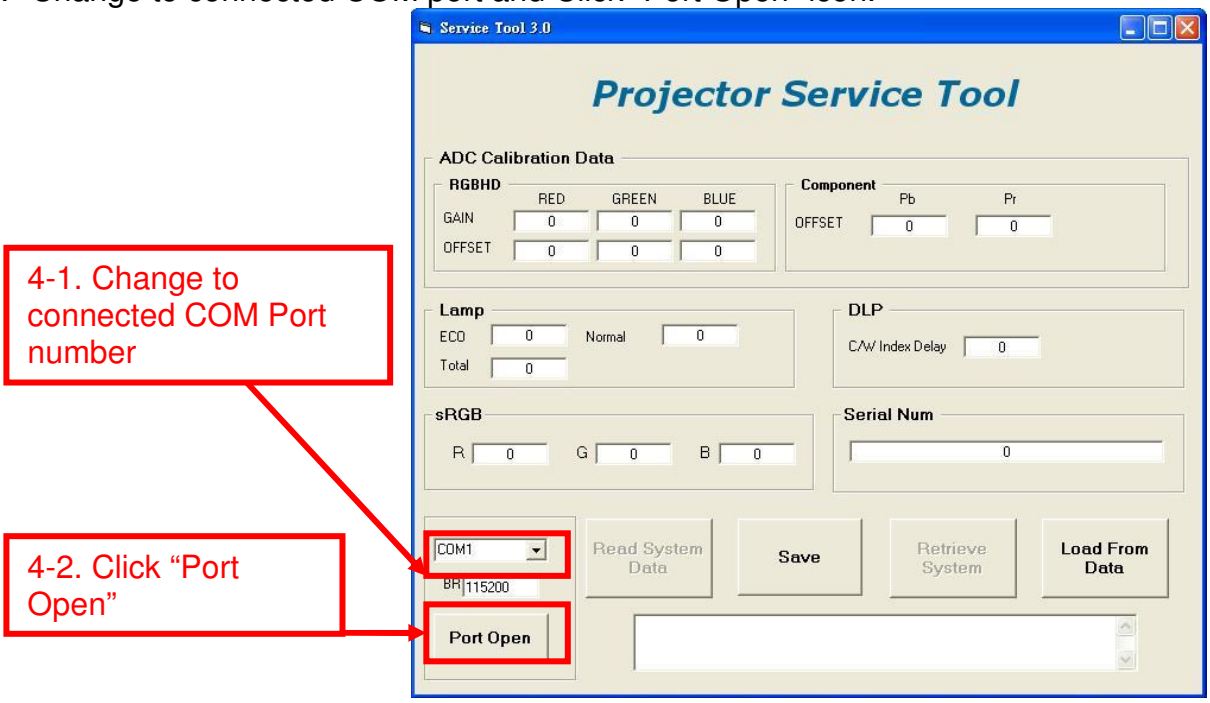

5. **Read data from original Main board:**
   Click "Read system Data", and it will read the Adjustment data (except Auto keystone data) & Serial Number from projector and show the "Read complete" message in information block.

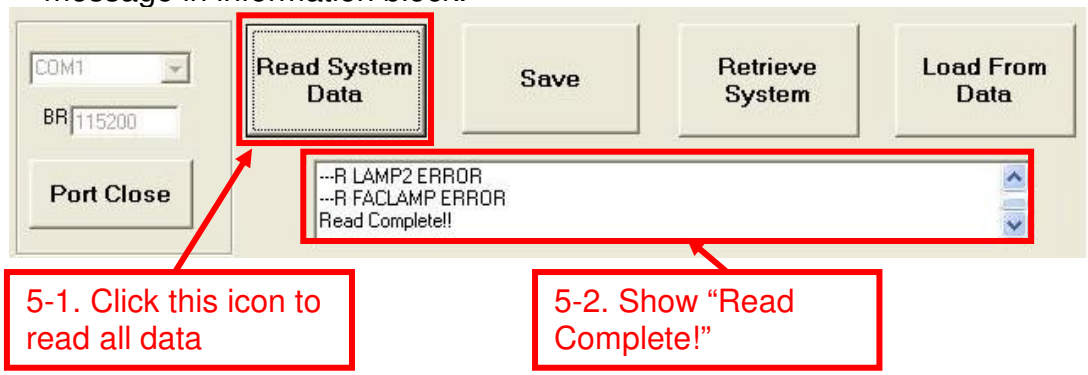

6. Click "Save" to save data into the assigned file name. Turn off projector.

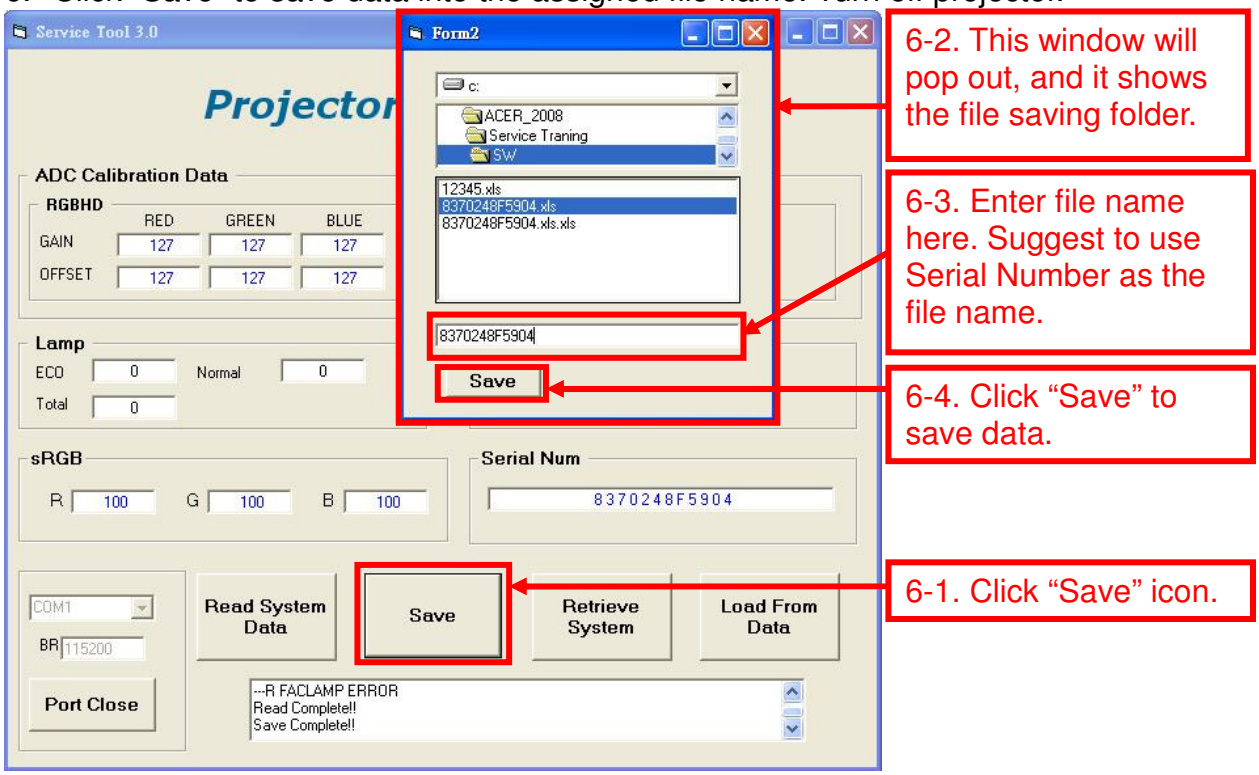

7. **Change new Main board:**
   (1) Unplug power cable and RS232 cable from projector, and change new Main board into Projector.
   (2) After changing Main board, reconnect power cable and RS232 cable into Projector.

8. “Load from data” & “Retrieve System” :

(1) Click “Load from data” and select load file.

(2) Click “Retrieve System” to write the values into main board.

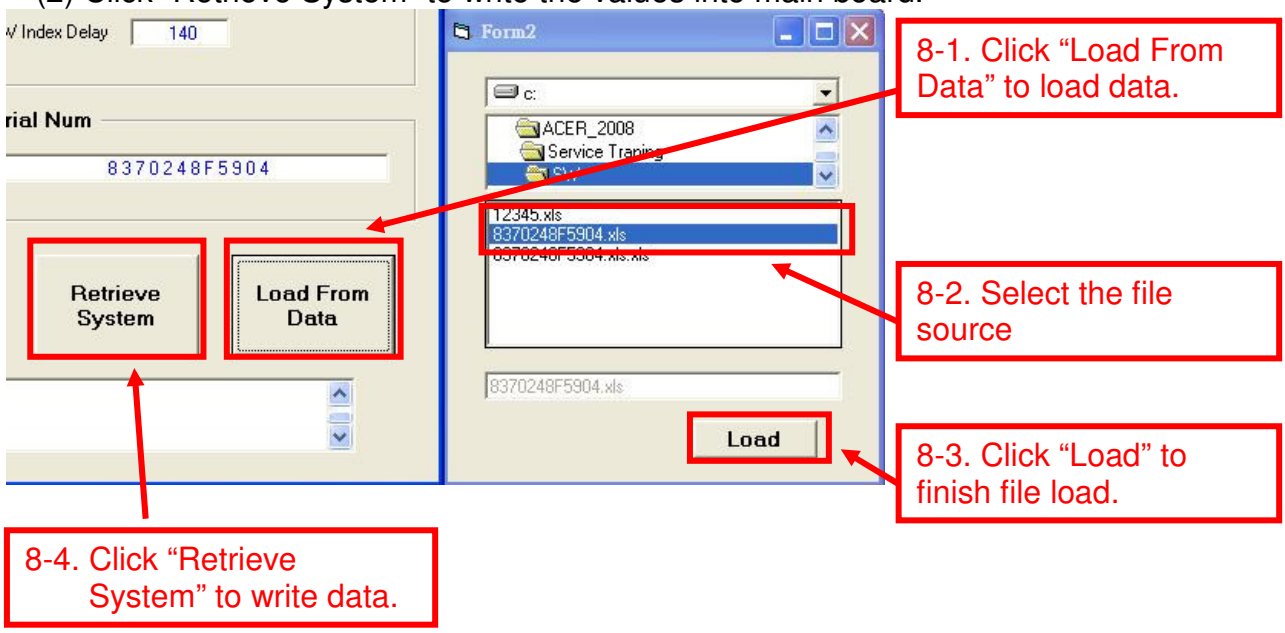

Chapter 3 System Disassembling and Replacement

Main Unit Disassembling

Tool: Screw Driver --Hex (#4-40) and Cross (Mechanical: M3, M4, Opt.Engine:M2, M2.5)

Process:

X1140A X1240 X1140 P1340W X1340WH H6510BD Dismantle SOP			
Step	**Description**		**Tool**
1	Disassemble the front case screw*1(M2.5*L10) and take off the lamp door. Disassemble the lamp module screw*1(M3*L6) and take off the lamp module,as the right Figure. **For X1140A/X1240/X1140 :** Disassemble the upper case screw*1(M3*L6). **For P1340W/X1340WH/H6510BD :** Disassemble the upper case screw*2(M3*L6).	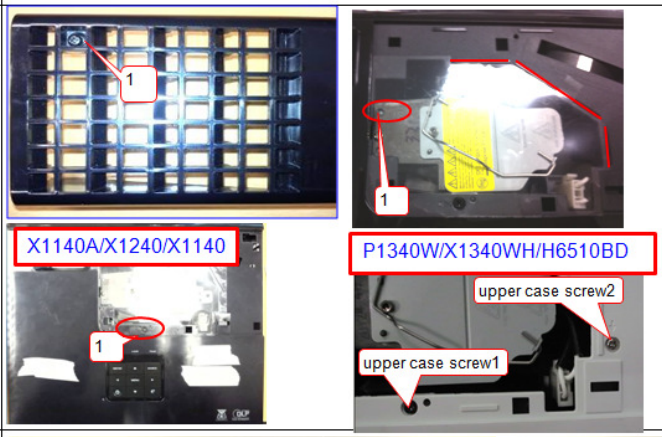	screw driver
2	Disassemble the front case screw*2(M3*L6) and take off the front case. Disassemble the lower case screw*5(M3*L6). Take off the upper case(hook x7)	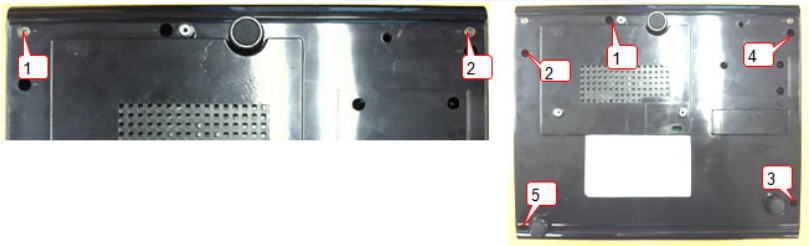	screw driver
3	Dismantle screw*1(M3*L6) on rear case, **For X1140A/X1240:** Dismantle screw*8(Hex#4-40) on rear case, then take off rear case. **For X1140:** Dismantle screw*4(Hex#4-40) on rear case, then take off rear case. **For P1340W/X1340WH:** Dismantle screw*8(Hex#4-40) and screw*1(M3*L6) on rear case, then take off rear case. **For H6510BD:** Dismantle screw*6(Hex#4-40), screw*2(M3*L6), and screw*1(M3*L8) on rear case, then take off rear case.	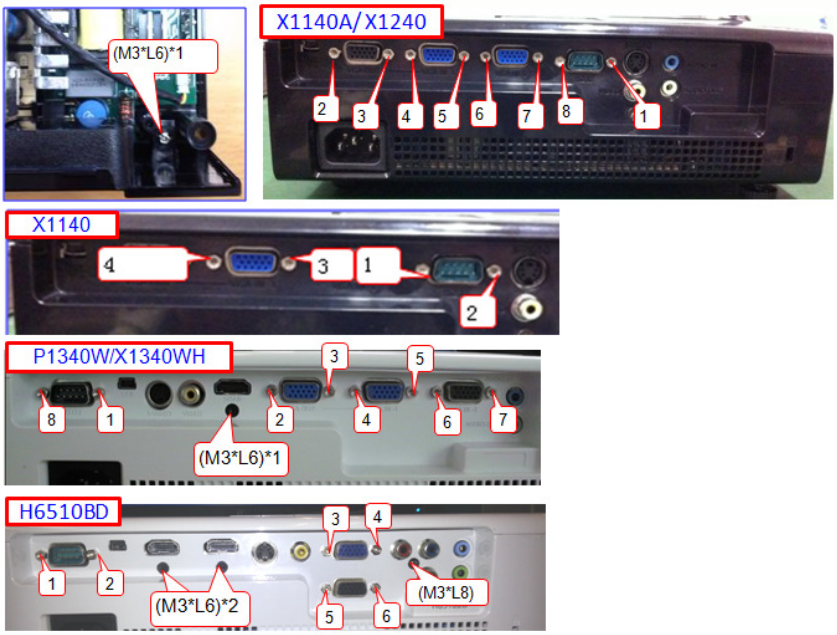	screw driver*2

4.1	**For X1140A/X1240/X1140 :** Extract the IR Wire and the speaker wire from mainboard, and take off the front case module. Dismantle C/W FPC wire, C/W sensor wire, blower fan wire, ballast 5pin wire, and outlet fan wire on main board. Disassemble the screw*5(M3*L6), and take off the shield main board.	X1140A/X1240/X1140 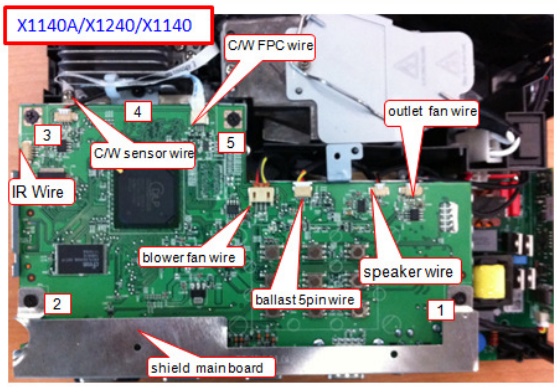	screw driver
4.2	**For P1340W/X1340WH :** Extract the IR Wire from main board, and take off the front case module. Dismantle C/W FPC wire, C/W sensor wire, blower fan wire, ballast 5pin wire, outlet fan wire and speaker wire on main board. Disassemble the screw*5(M3*L6), and take off the shield main board.	P1340W/X1340WH 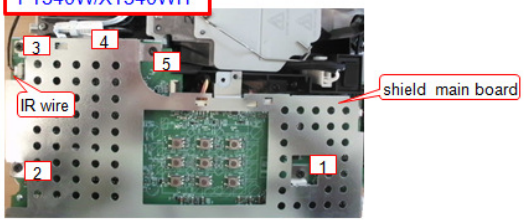 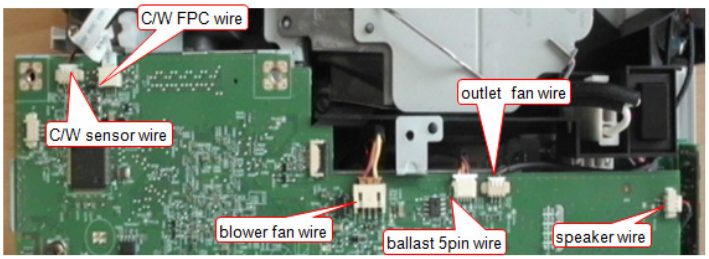	screw driver
4.3	**For H6510BD :** Extract the IR Wire from main board, and take off the front case module. Dismantle C/W FPC wire, C/W sensor wire, blower fan wire, ballast 5pin wire, outlet fan wire and speaker wire on main board. Disassemble the screw*5(M3*L6), and take off the shield main board.	H6510BD 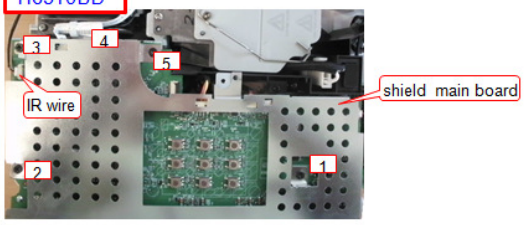 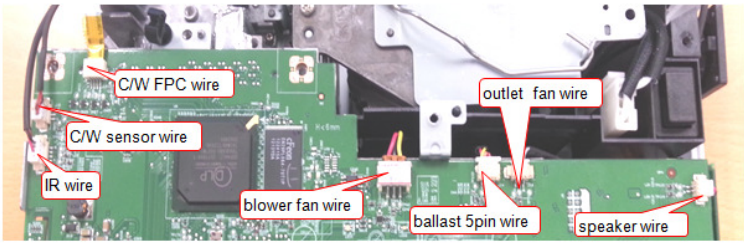	screw driver
5	Disassemble the main board and take off the outlet fan. Disassemble the screw*3(M3*L6) and take off the BKT main board	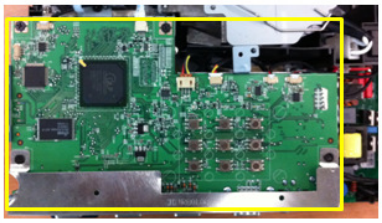 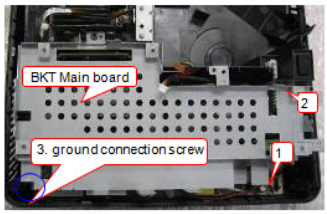 **Note:** Circuit boards > 10cm² has been highlighted with the yellow rectangle as above image shows. Please detach the Circuit boards and follow local regulations for disposal.	screw driver

6.1	**For X1140A/X1240/X1140/P1340W/X1340WH:** Extract the door switch wire, thermal wire, ballast 5pin wire, and lamp wire. Disassemble the screw*2(M3*L6) of ballast. Take off the Power board and the ballast. Take off the gasket*1. Disassemble the screw*3(M3*L6) and take off the Engine module.	X1140A/X1240/X1140 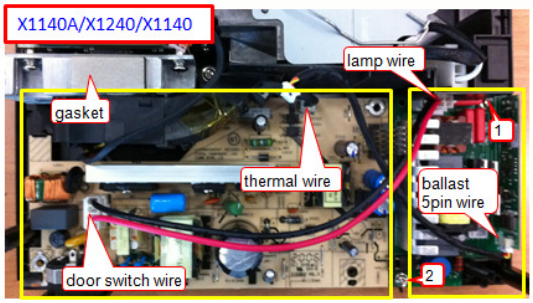 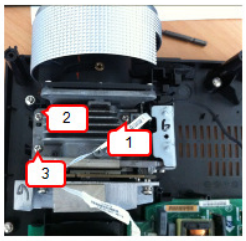 **Note:** Circuit boards > 10cm² has been highlighted with the yellow rectangle as above image shows. Please detach the Circuit boards and follow local regulations for disposal.	screw driver
		P1340W/X1340WH 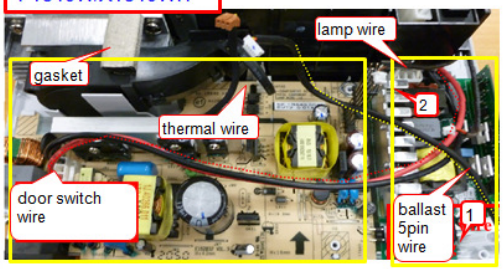 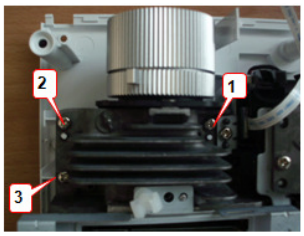 **Note:** Circuit boards > 10cm² has been highlighted with the yellow rectangle as above image shows. Please detach the Circuit boards and follow local regulations for disposal.	screw driver
6.2	**For H6510BD:** Extract the door switch wire, thermal wire, ballast 5pin wire, and lamp wire. Disassemble the screw*2(M3*L6) of ballast. Take off the Power board and the ballast. Take off the gasket*2. Disassemble the screw*3(M3*L6) and take off the Engine module.	H6510BD 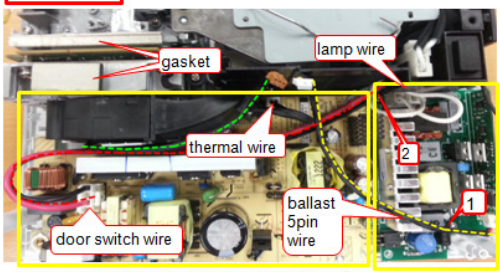 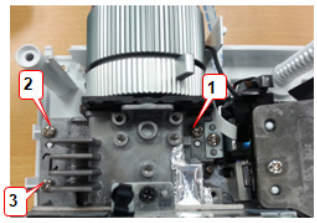 **Note:** Circuit boards > 10cm² has been highlighted with the yellow rectangle as above image shows. Please detach the Circuit boards and follow local regulations for disposal.	screw driver
7	Disassemble the screw*1(M3*L6) , and take off the lamp box. Disassemble the screw*1(M3*L6), and take off the blower fan and blower nozzle.	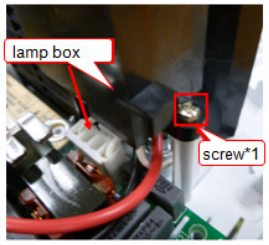 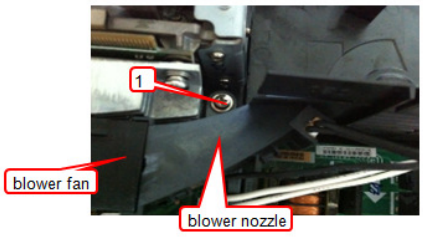 	screw driver
8	Extract the rubber foot rear *3, foot adjust rear, and foot adjust in the lower case	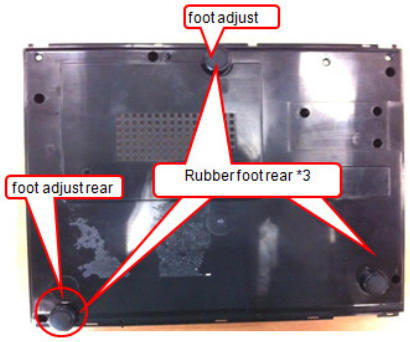 	screw driver

X1140A X1240 X1140 P1340W X1340WH H6510BD Dismantle SOP			
Step	**Description**		**Tool**
1	Take off the gasket*1. Disassemble the Ring Focus.		
2	Take off the LENS screw*3(M3*L4) and Ring Zoom screw*2(M2*L3). Take off the Ring Zoom	 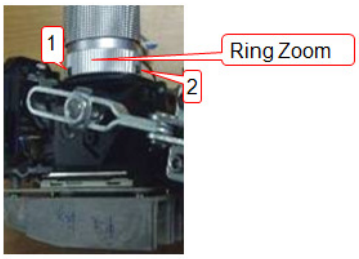	screw driver
3	Disassemble the spring screw*4(M3*L13.85), and take off the Hest-sink and DMD chip with Chip BD.	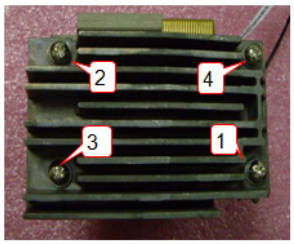 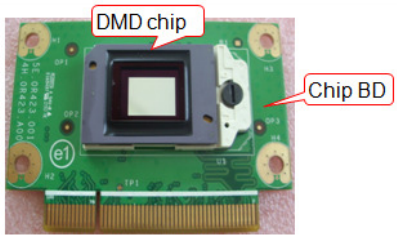	screw driver
4	Disassemble the Baffle DMD and Sponge DMD. Disassemble the screw*3 (M3*L4, M3*L5) and take off the CW module.	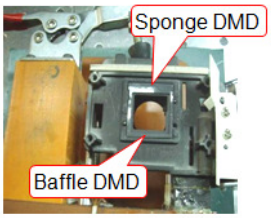 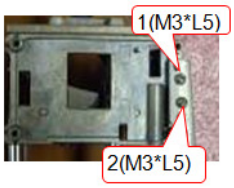 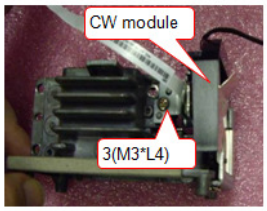	screw driver
5	Rotate to open the switch on socket, and take off the DMD chip board.	  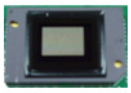 **Note:** Circuit boards > 10cm² has been highlighted with the yellow rectangle as above image shows. Please detach the Circuit boards and follow local regulations for disposal.	
6.1	**For X1140A/X1240/X1140/P1340W/X1340WH :** Disassemble ILL module screw*2(M2*L4). Take off Clip CM Up, CM, Clip CM Front, Clip CM Side, screw*1(M2*L3.5) and sponge.	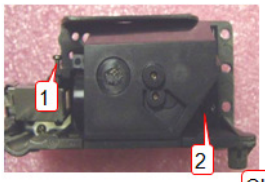 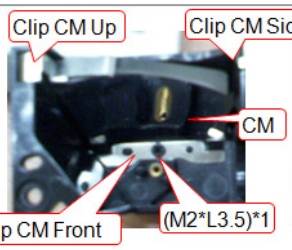 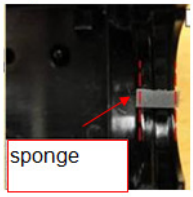	screw driver

6.2	**For H6510BD:** Disassemble ILL module(screw*3). Take off Clip CM, then take off the Concave mirror. Take off the sponge.	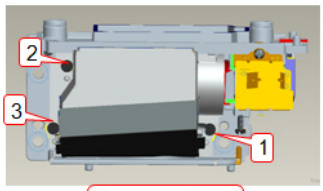   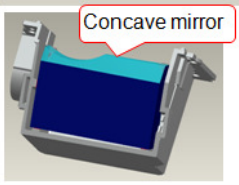 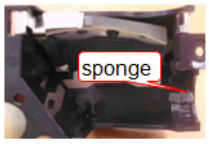	screw driver
7	Take off the Clip FM and Mirror Fold. Disassemble the screw*2(M2*L3). Take off the Clip LP and Baffle LP. Take off the LP module . Disassemble the LP screw*2(M2*L8).	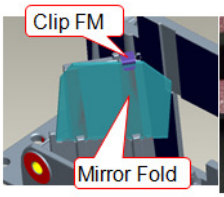 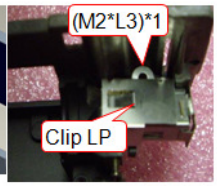 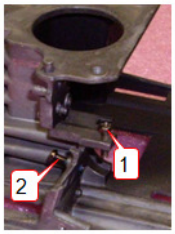 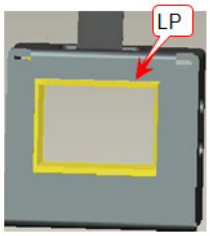 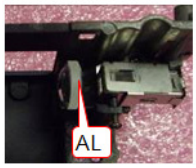 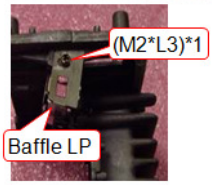	screw driver

Module Assembly Key Point - Optical Engine

1. Light Pipe Module assembly and overfull alignment

- **For X1140A/X1240/X1140:**

1.1 Assembly LP Module to HSG DMD

(1) Assembly “Clip LP” and lock with screw well (Fig. 1-1).

(2) Press CLIP of RE_BKT_LP first, and then push it into the hole (Fig. 1-2).

(3) Place LP Module on LP datum of “DMD HSG” and adjustment screw well (Fig. 1-3).

(4) Assemble “Baffle LP” first (Fig. 1-4) & push “Baffle LP” to hook DMD HSG (Fig. 1-5).

(5) When lock the screw of Baffle LP, the hand must push the left corner of Baffle LP before (Fig. 1-6).

(6) Lock the screw of Baffle LP well then release the hand (Fig. 1-7),

(7) Assemble two Overfill adjustment screws (M2, 8L) to HSG DMD (Fig. 1-8).

** Adjustment criteria refer to below item 1.2

1.2 Overfill Adjustment of LP Module

Overfill Adjustment Criteria:

(1) Pre-assemble 2 adjusting screws.

(2) Alignment Sequence:

Adjust “Horizontal Adjustment Screw” first, and then “Vertical Adjustment Screw”.

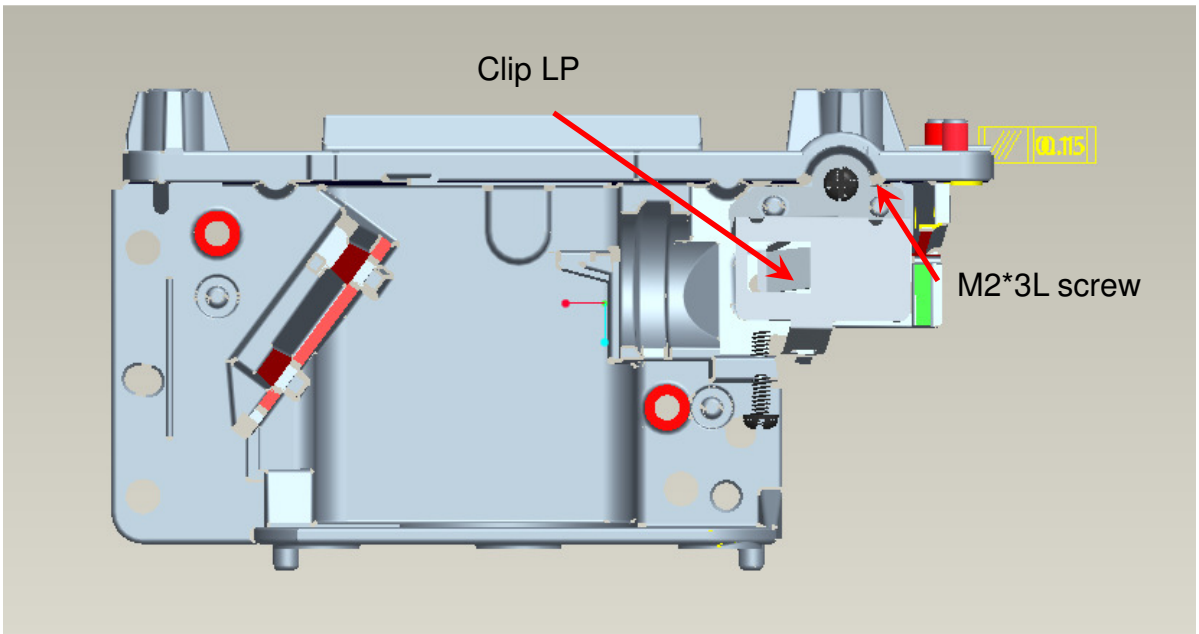

Fig. 1-1

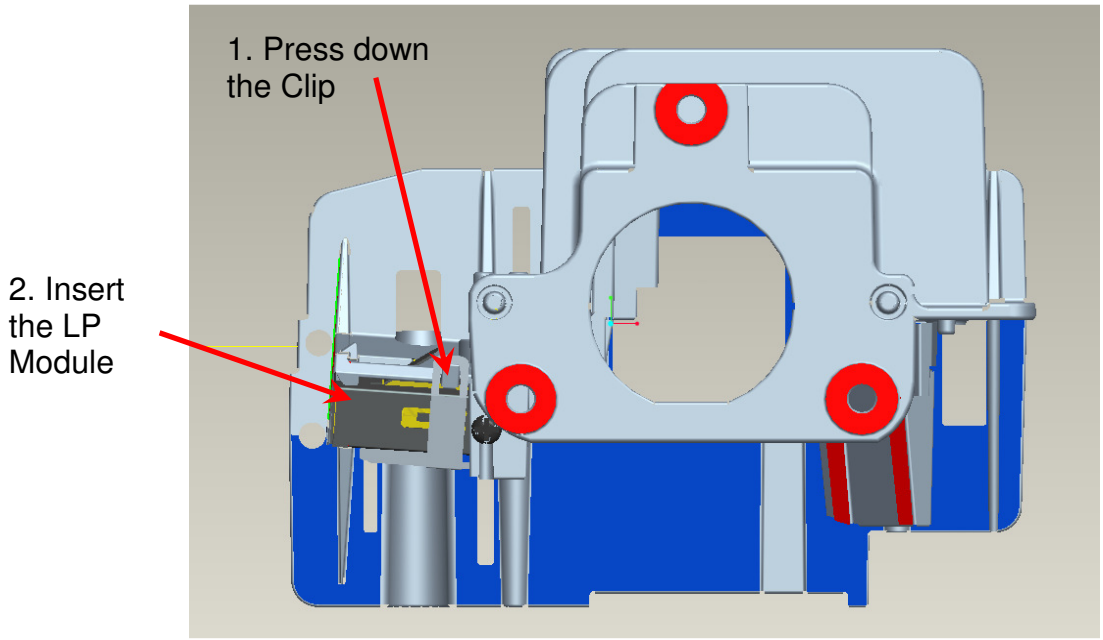

Fig. 1-2

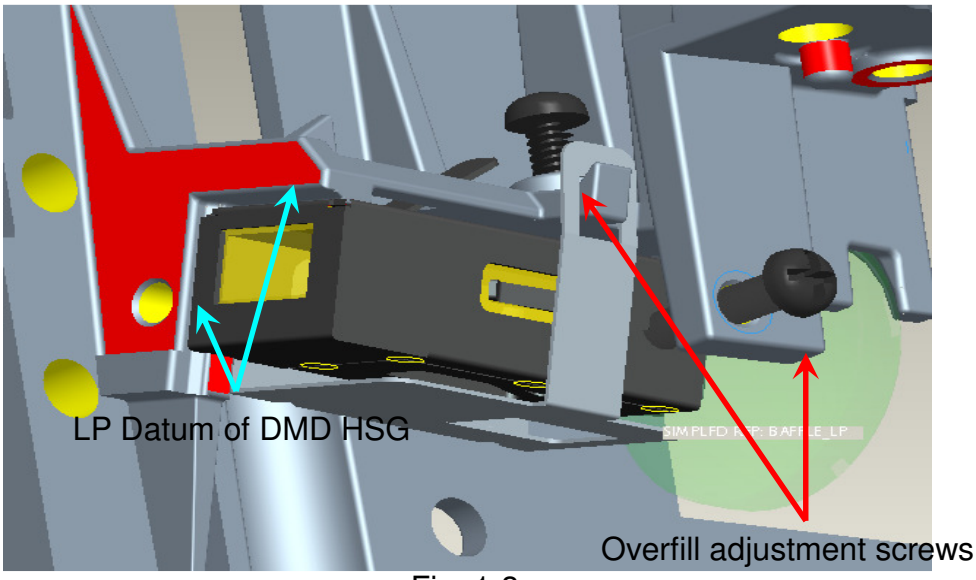

Fig. 1-3

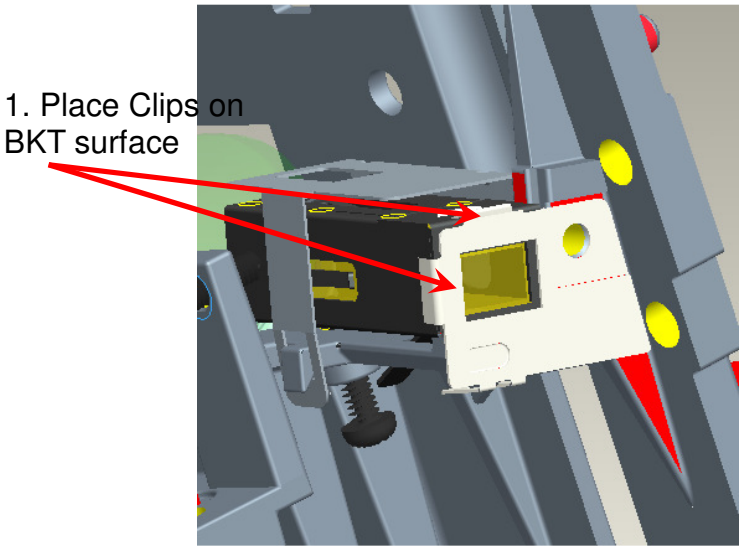

Fig. 1-4

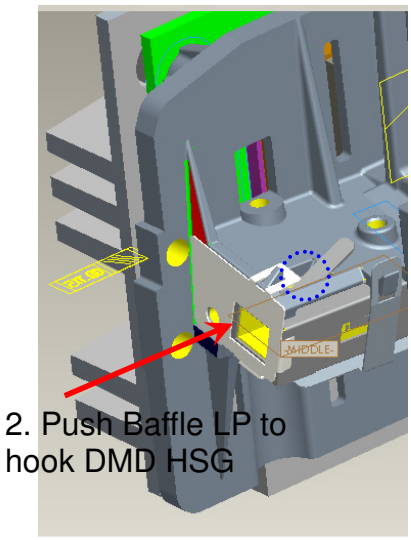

Fig. 1-5

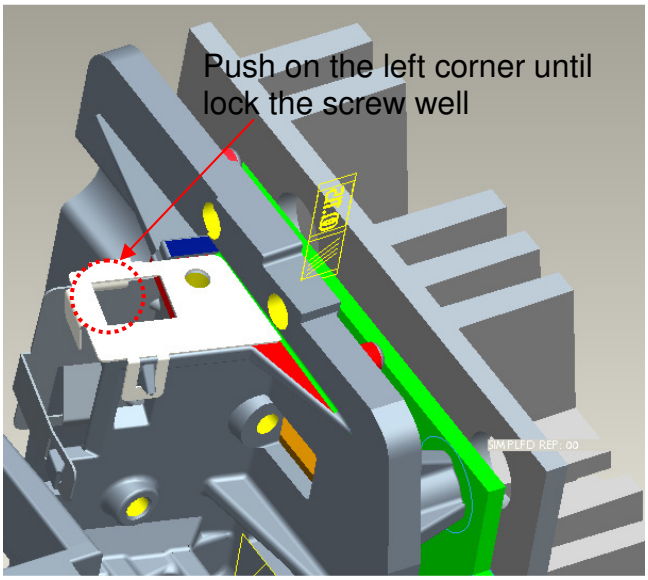

Fig. 1-6

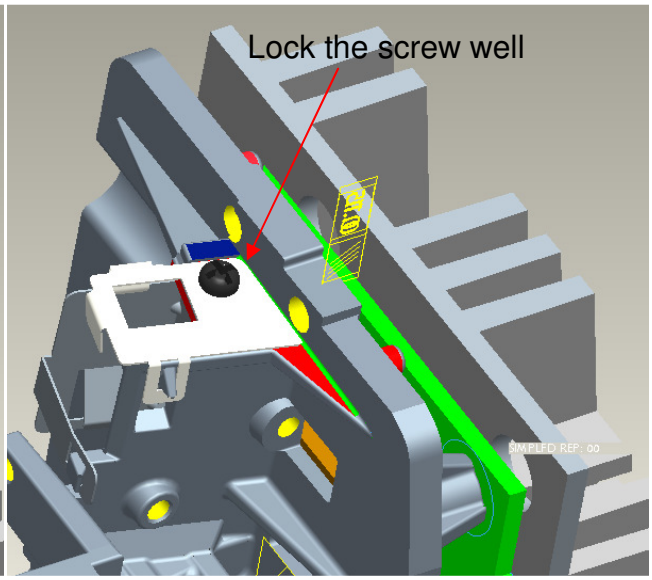

Fig. 1-7

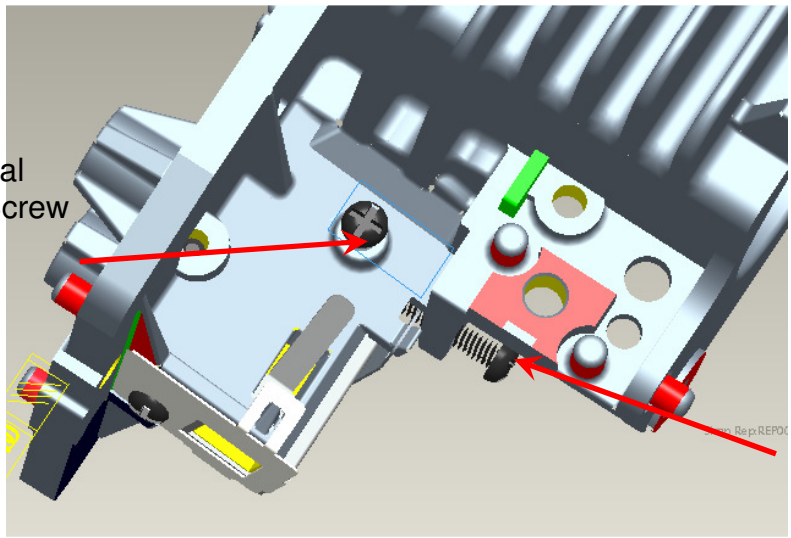

Fig. 1-8

- **For P1340W/X1340WH:**

1.3 Assemble LP Module to HSG DMD

(1) Assemble two Overfill adjustment screws (M2) to HSG DMD (Fig. 1-9).
** Adjustment criteria refer to below item 1.4 & Fig. 1-10.

(2) Hook Clip LP to HSG DMD, and lock with screw well. (Fig. 1-11).

(3) Press CLIP of BKT LP first and push it into the hole (Fig. 1-12).

(4) Place LP Module on LP datum of “DMD HSG” and adjustment screw well (Fig. 1-13).

(5) Assemble “Baffle LP”, Hook top of Baffle LP first (Fig. 1-14) & Hook bottom of Baffle LP to HSG DMD well (Fig. 1-15).

1.4 Overfill Adjustment LP Module

Overfill Adjustment Criteria:

(1) Pre-assemble 2 adjusting screws. Criteria as Fig.1-12

(2) Alignment Sequence:

a. To adjust “Horizontal Adjustment Screw” firstly, and then “Vertical Adjustment Screw”.

b. Refer to Fig. 1-12

(3) For Overfill Re-adjustment:

a. Those 2 Adjustment Screws must be released closely to the “Pre-assembly” positions first (Fig. 1-12).

b. Follow adjustment steps as Item 1.4-(2).

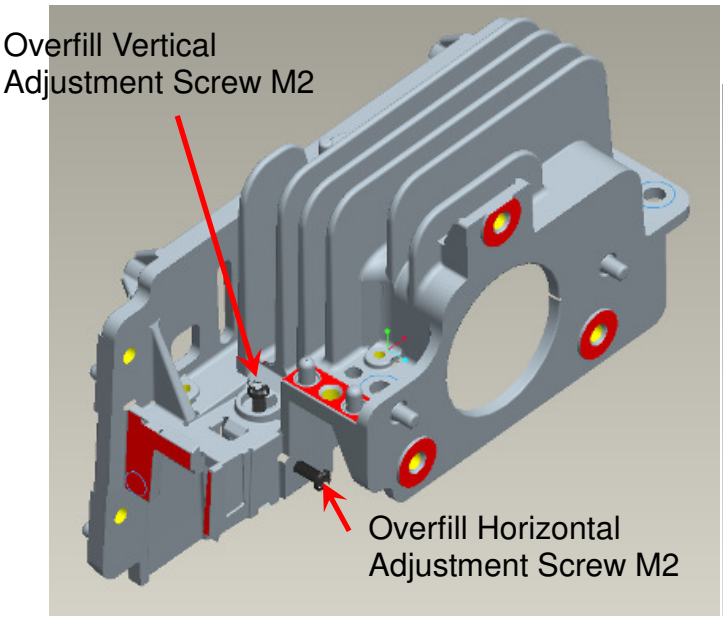

Fig. 1-9

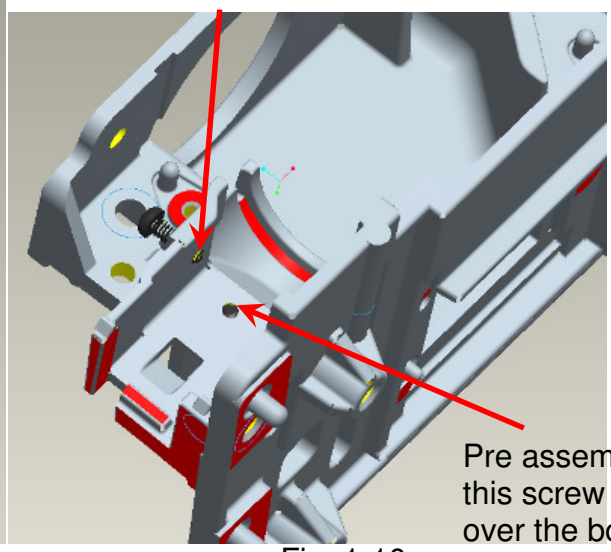

Fig. 1-10

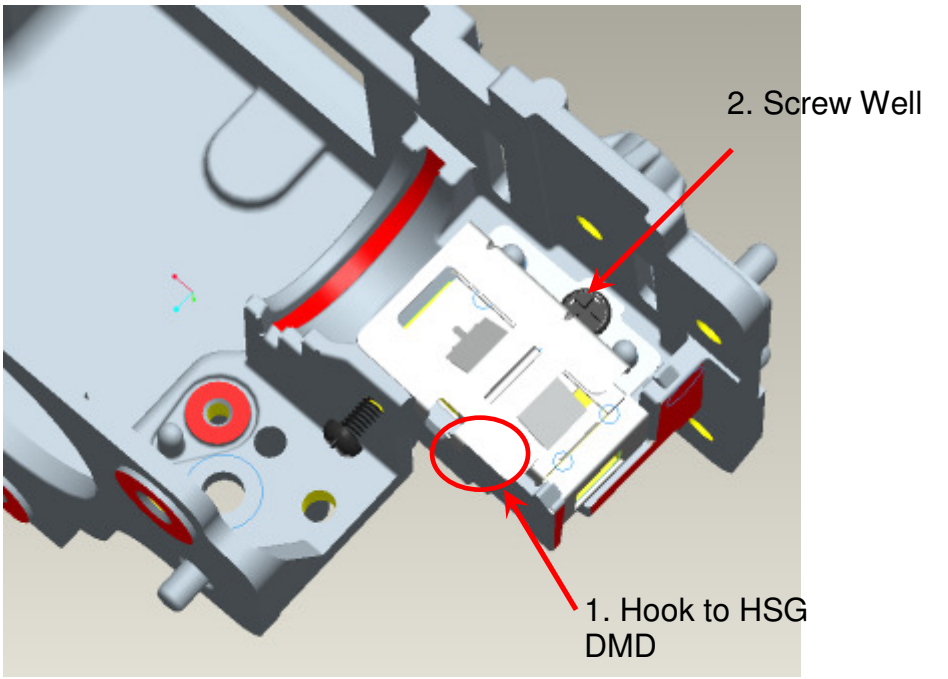

Fig. 1-11

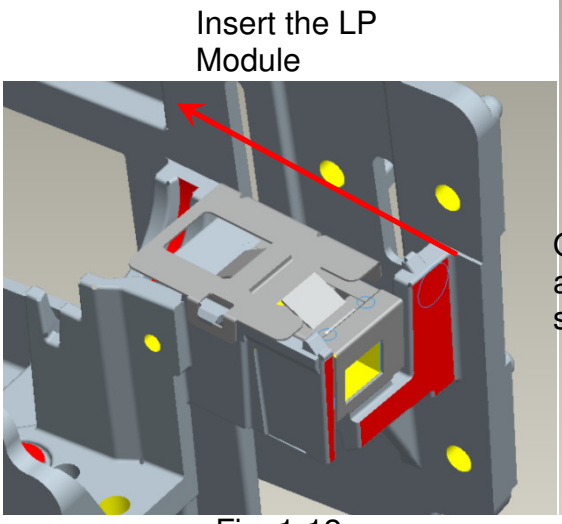

Fig. 1-12

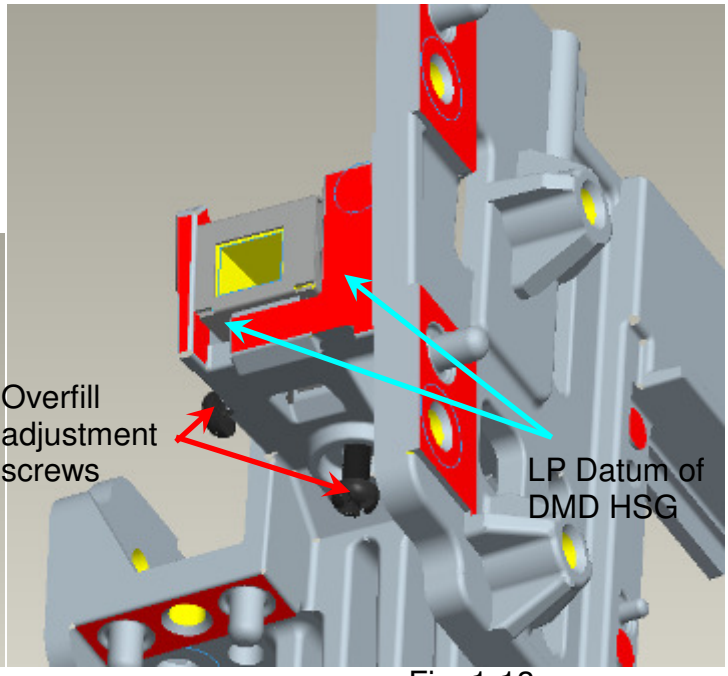

Fig. 1-13

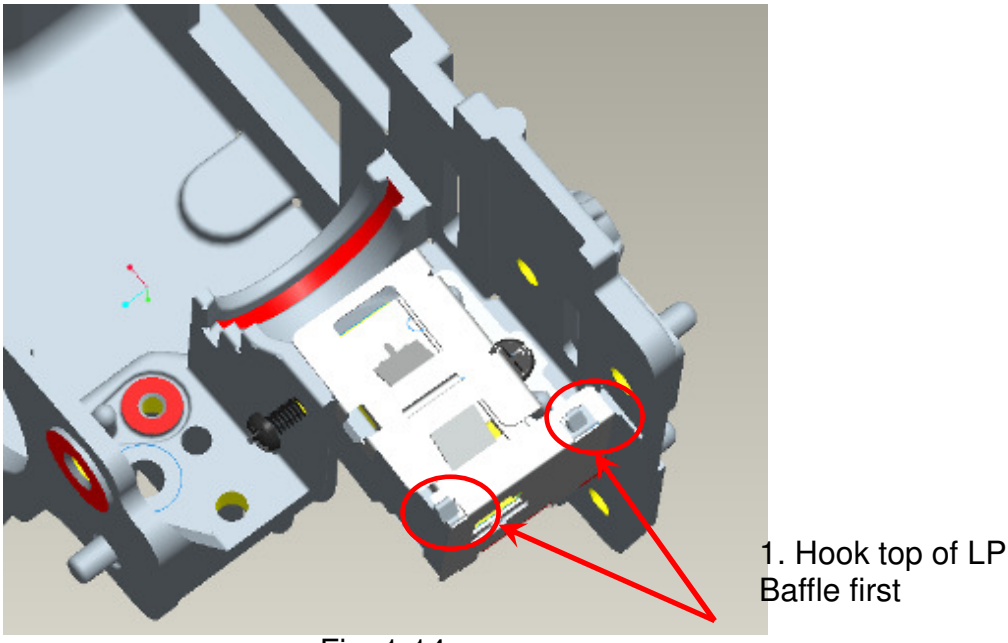

Fig. 1-14

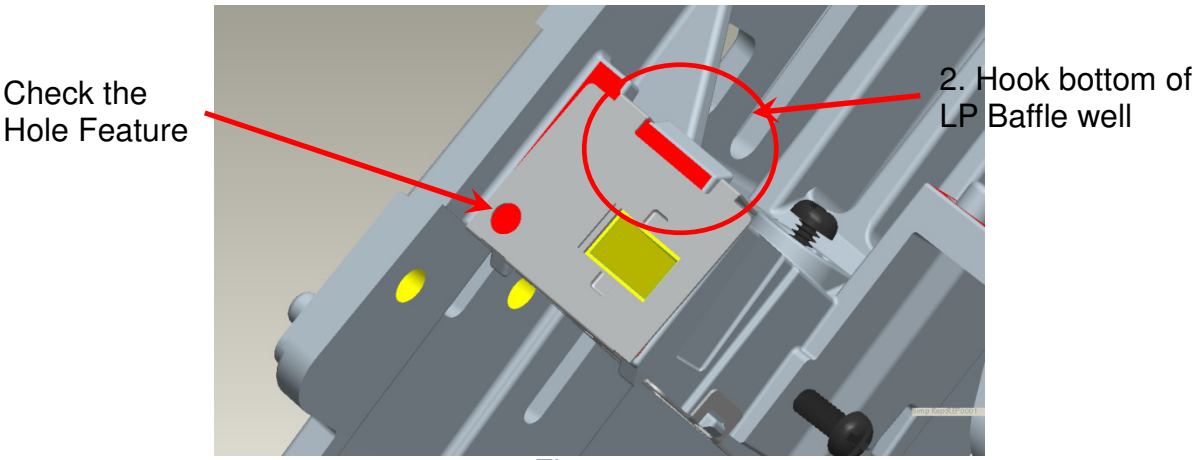

Fig. 1-15

- **For H6510BD:**

1.5 Assembly LP Module to HSG DMD

(1) Assembly two Overfill adjustment screws (M2) to HSG DMD (Fig. 1-16).
** Adjustment criteria refer to below item 1.6 & Fig. 1-17.

(2) Press CLIP of BKT LP first and push it into the hole (Fig. 1-18).

(3) Hook Clip LP to HSG DMD, and lock with screw well. (Fig. 1-19).

(4) Placed LP Module on LP datum of “DMD HSG” and adjustment screw well, shown (Fig. 1-20).

(5) Assembly “Baffle LP”, Hook top of Baffle LP first (Fig. 1-21) & screws (M2) well (Fig. 1-22).

1.6 Overfill Adjustment @ LP Module

Overfill Adjustment Criteria:

(1) Pre-assembly 2 adjusting screws. Criteria shown as Fig.1-16

(2) Alignment Sequence:

a. To adjust “Horizontal Adjustment Screw” firstly, and then “Vertical Adjustment Screw”.

b. Refer to Fig. 1-16

(3) For Overfill Re-adjustment:

a. Those 2 Adjustment Screws must be released closely to the “Pre-assembly” positions first (Fig. 1-19).

b. Follow adjustment steps shown in Item 1.6 (2).

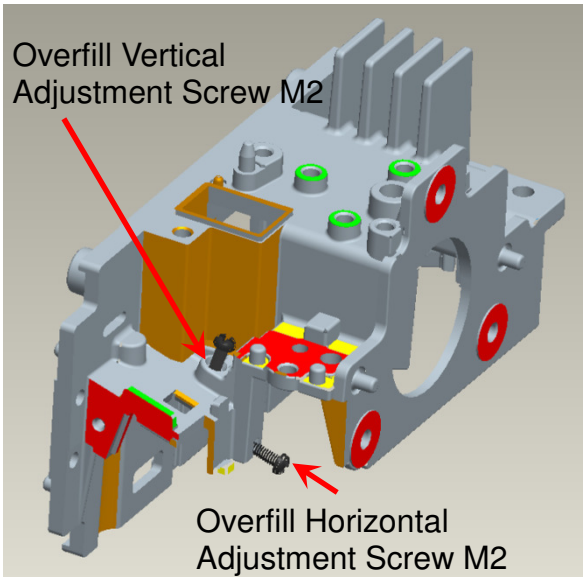

Fig. 1-16

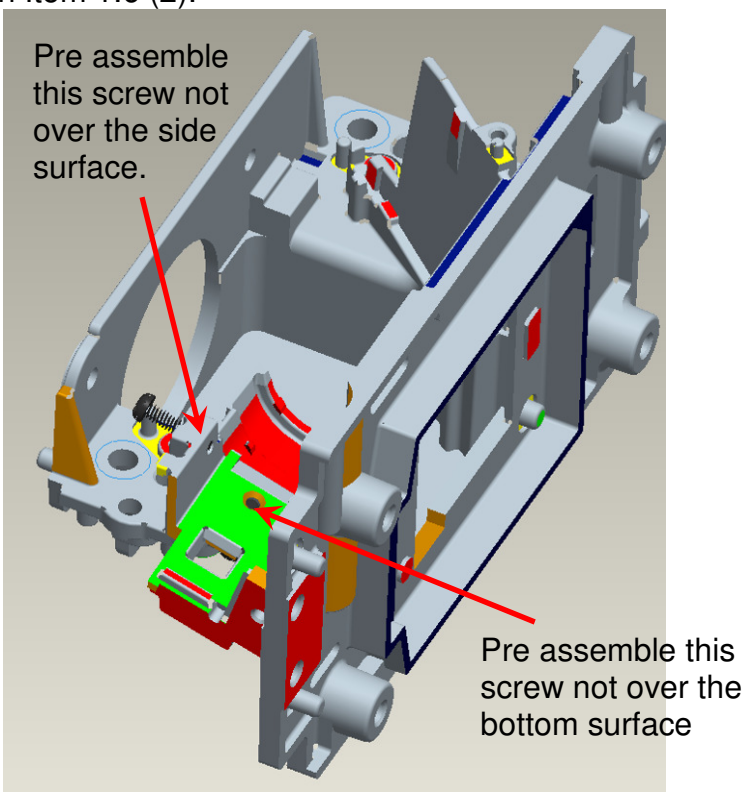

Fig. 1-17

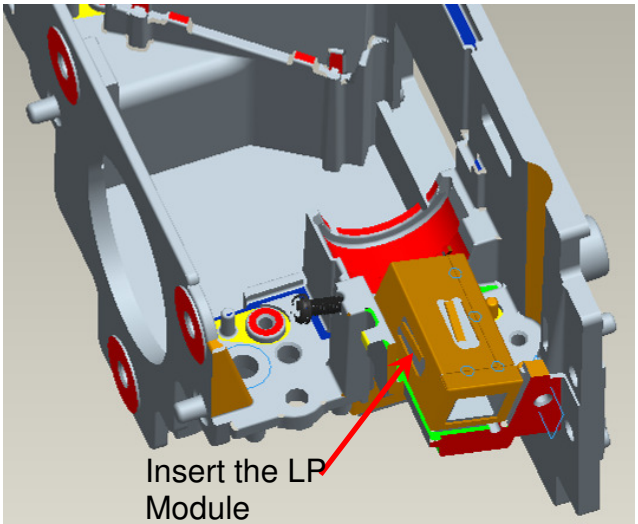

Fig. 1-18

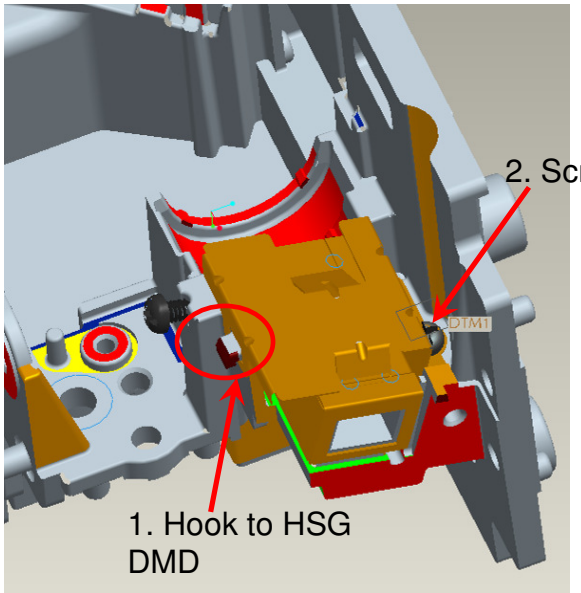

Fig. 1-19

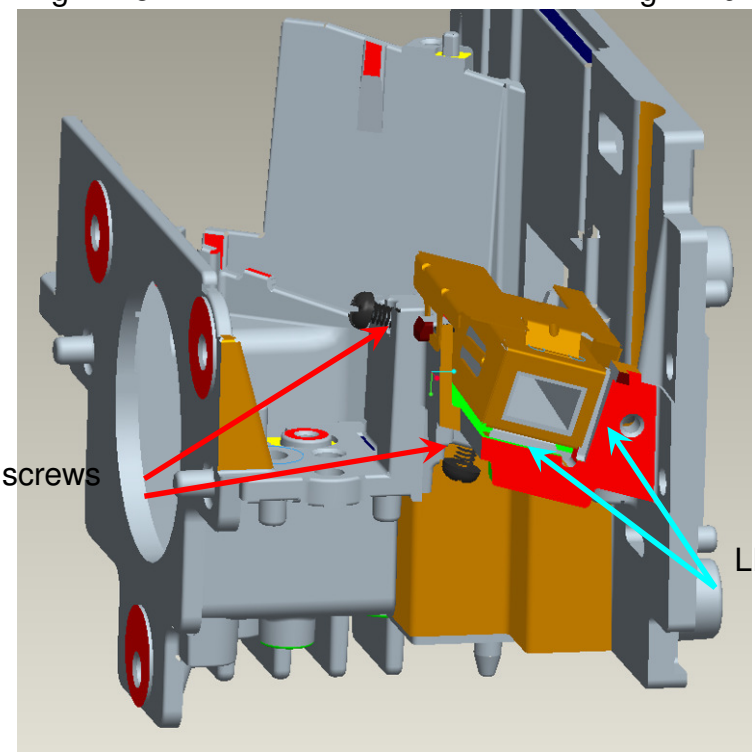

Fig. 1-20

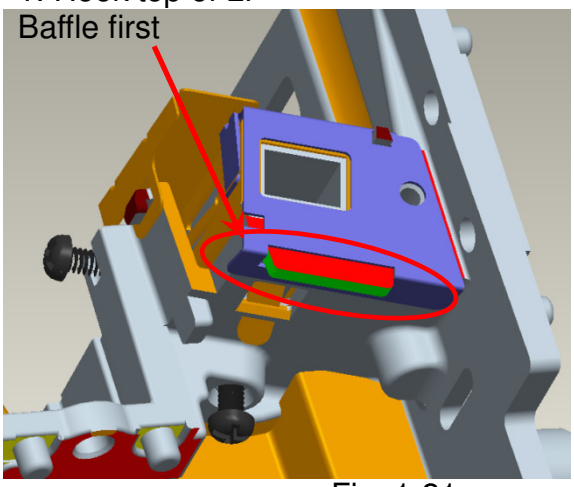

Fig. 1-21

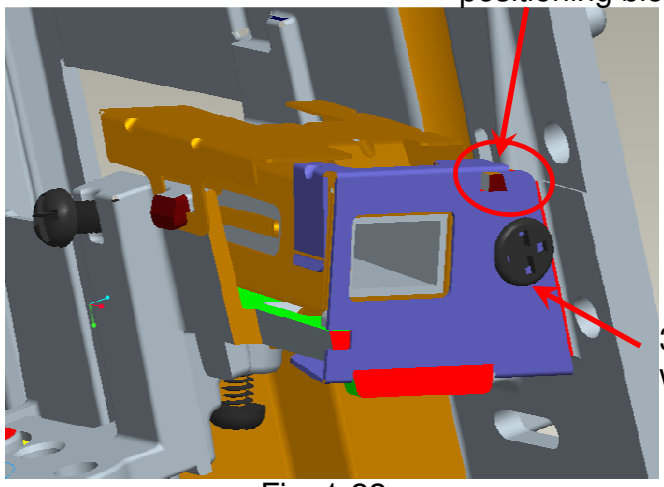

Fig. 1-22

2. Assembly FM:

- **For X1140A/X1240/X1140:**

2.1 Place FM on “HSG DMD” surface(Fig. 2-1) and use “Clip FM” to fix FM(Fig. 2-2).

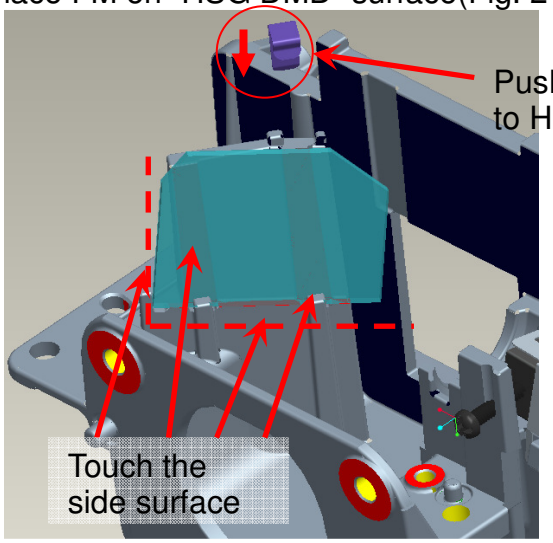

Fig. 2-1

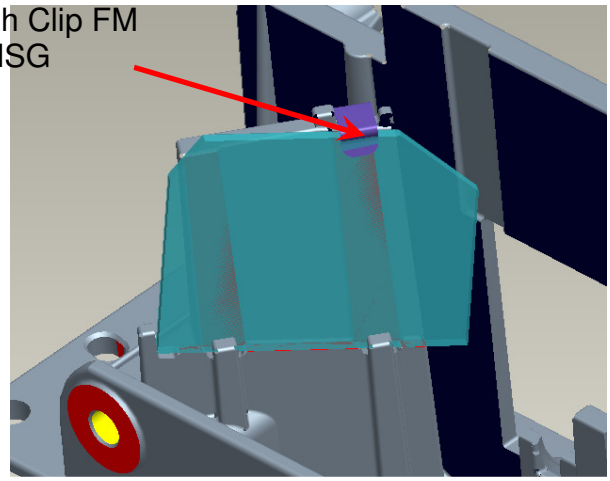

Fig. 2-2

- **For P1340W/X1340WH:**

2.2 FM Module Assembly

(1) Check mark point of FM and place FM on “Sub HSG” surface (Fig. 2-3, 2-4).

(2) Assemble “Clip FM Z5” to fix FM(Fig. 2-5).

(3) Check Clip FM hook Sub HSG Well (Fig. 2-6)

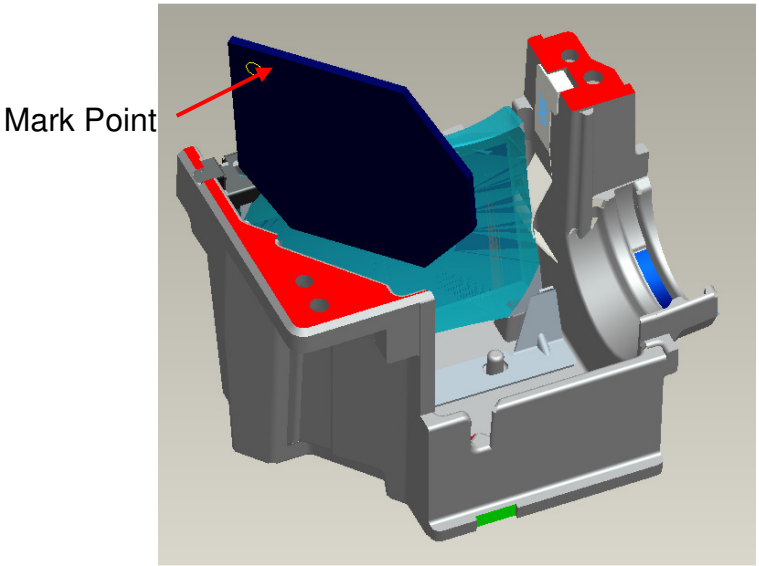

Fig. 2-3

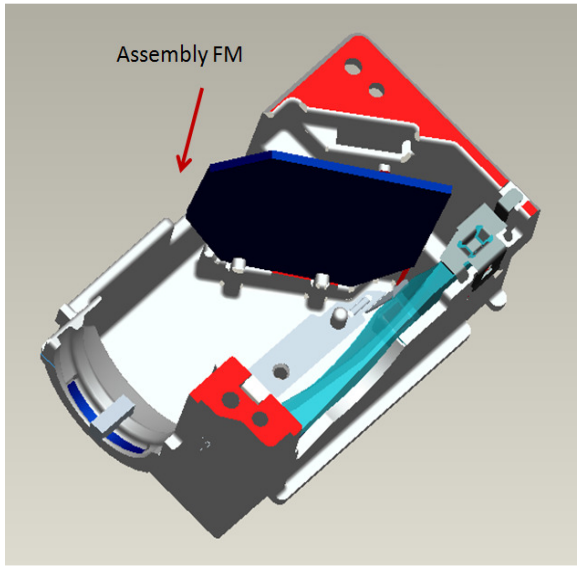

Fig. 2-4

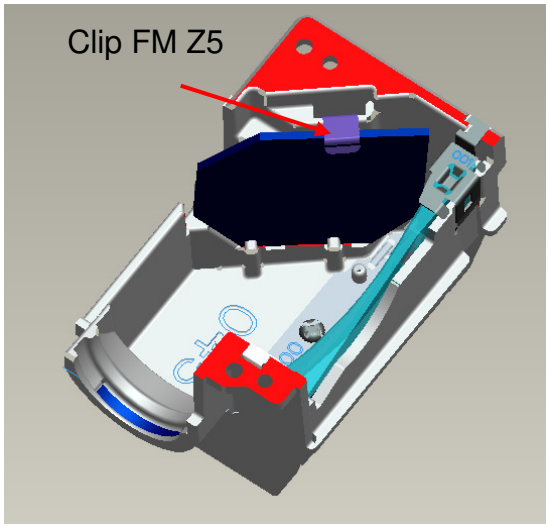

Fig. 2-5

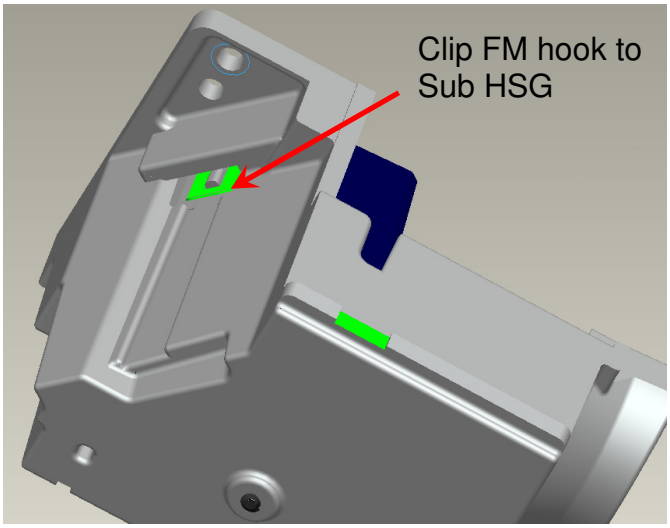

Fig. 2-6

- **For H6510BD:**

2.3 FM Module Assembly

(1) Check mark point of FM and place FM on “HSG DMD” surface (Fig. 2-7-1, 2-7-2).

(2) Assemble “Clip FM ” to fix FM(Fig. 2-8).

(3) Check Clip FM hook HSG DMD and Screw Well (Fig. 2-8)

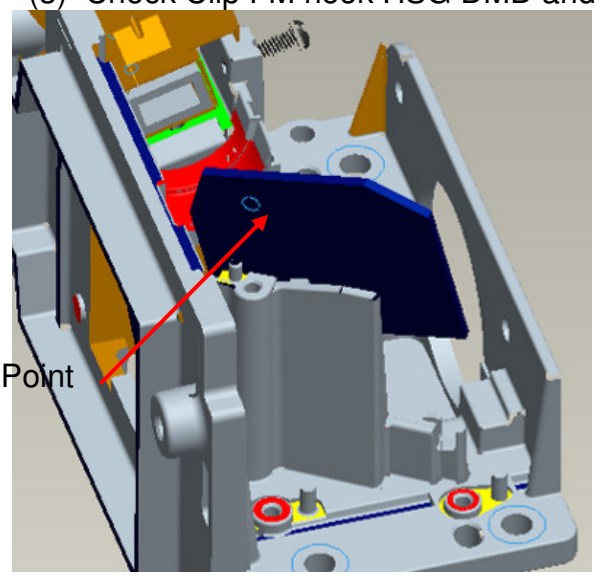

Fig. 2-7-1

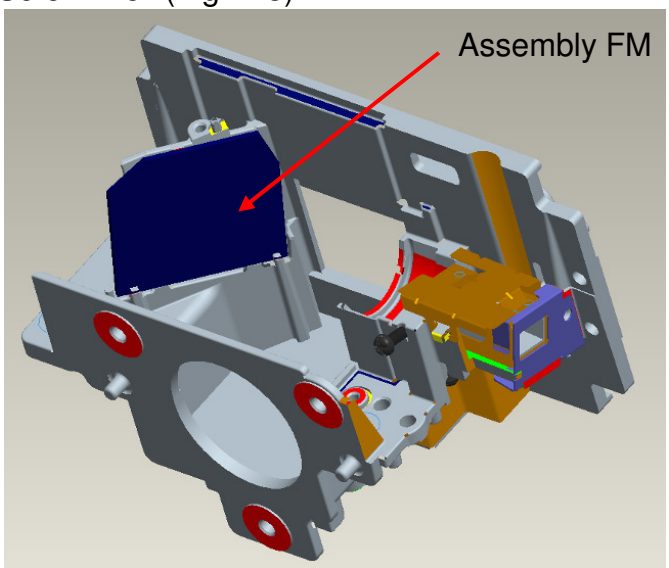

Fig. 2-7-2

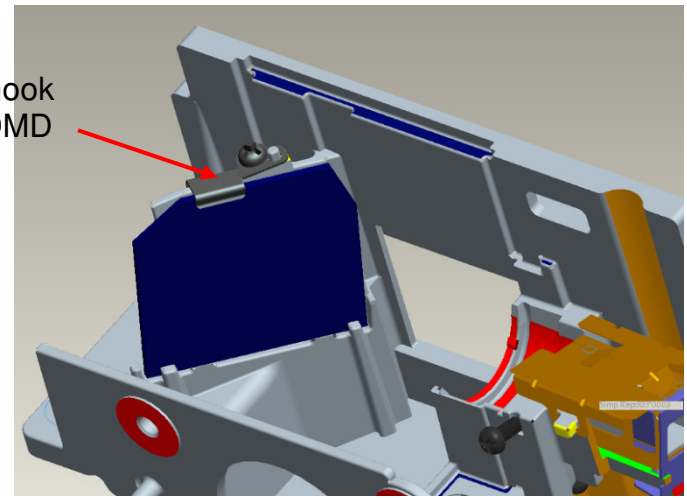

Fig. 2-8

3. Assembly HSG ILL Module:

- **For X1140A/X1240/X1140:**

3.1 CM Assembly

(1) Insert “Clip CM Side” first, and then place “Clip Front CM” to fixed-shaft of ILL SUB before locking screw (Fig. 3-1, Fig. 3-2).

(2) Assemble Mylar SUB HSG to HSG ILL well (Fig. 3-3).

(3) Assemble CM to HSG ILL and to make CM contact three datum on the HSG ILL well (Fig. 3-3).

(4) Assemble” MYLAR CM ” to the CMD firstly, “CLIP TOP CM”(with forceps) to the “HSG ILL” (Fig. 3-4,).

(5) Check and make sure “CLIP of CM” hooks the HSG ILL very well (Fig. 3-5).

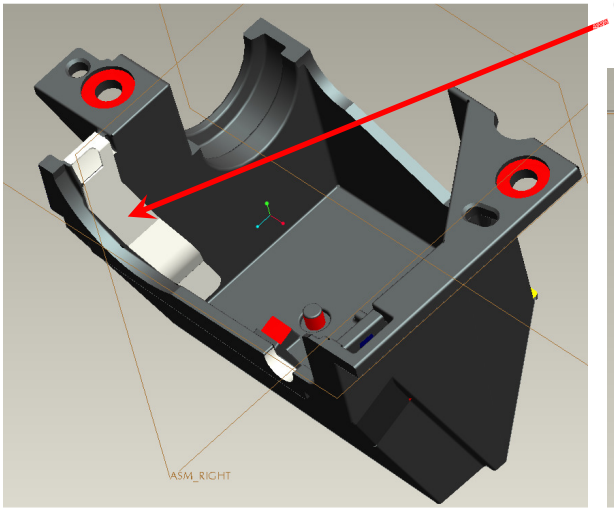

Fig. 3-1

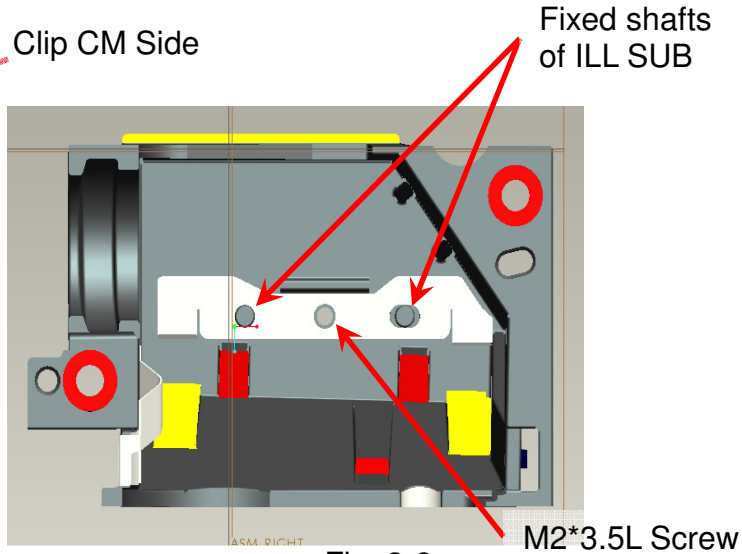

Fig. 3-2

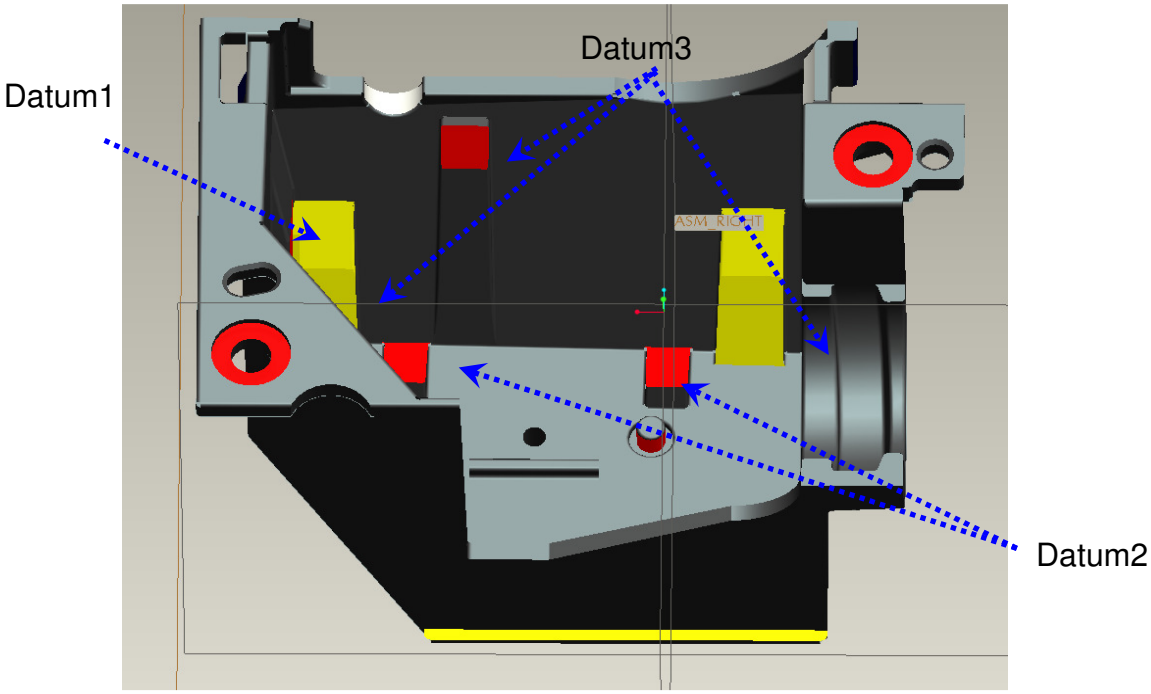

Fig. 3-3

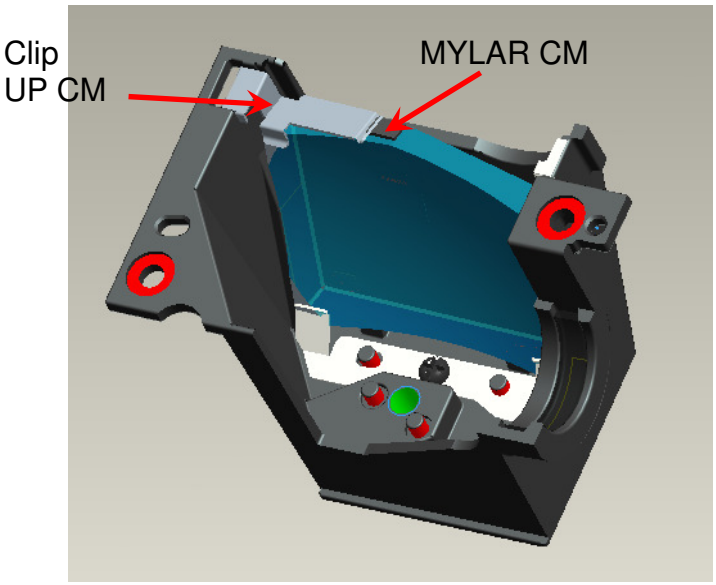

Fig. 3-4

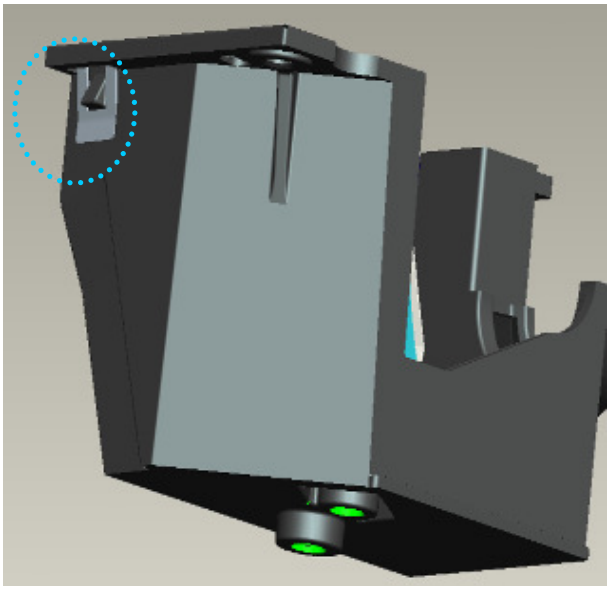

Fig. 3-5

- **For P1340W/X1340WH:**

3.2 CM Assembly

(1) Place “Clip CM Front” first, and screw well (Fig. 3-6).

(2) Insert Clip CM Side to Sub HSG (Fig. 3-7).

(3) Assemble CM to Sub HSG and make CM contact Sub HSG datum well (Fig. 3-8).

(4) Assemble Clip CM Up to Sub HSG & Check the feature for Clip CM Up XGA. (Fig. 3-9,).

(5) To check and make sure Clip CM Up to hook the Sub HSG Well (Fig. 3-10).

(6) Paste “Sponge tube AL” on cannelure of” HSG ILL” (Fig. 3-10).

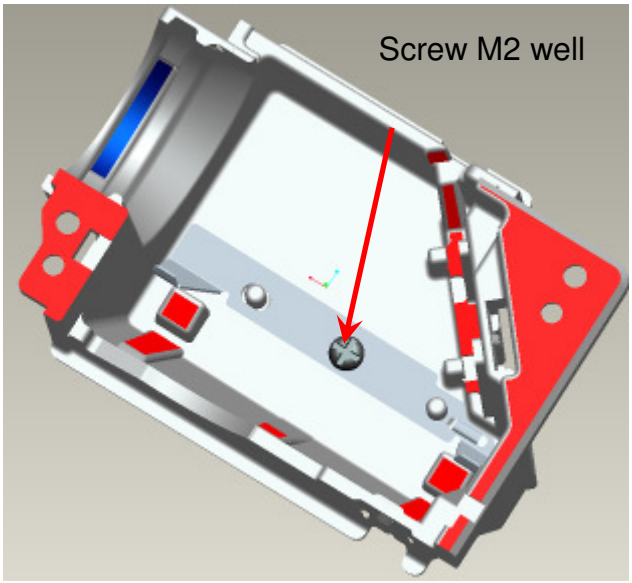

Fig. 3-6

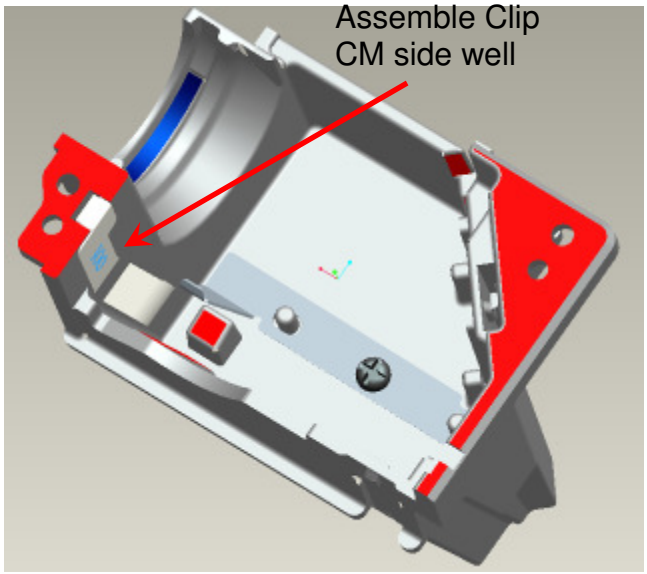

Fig. 3-7

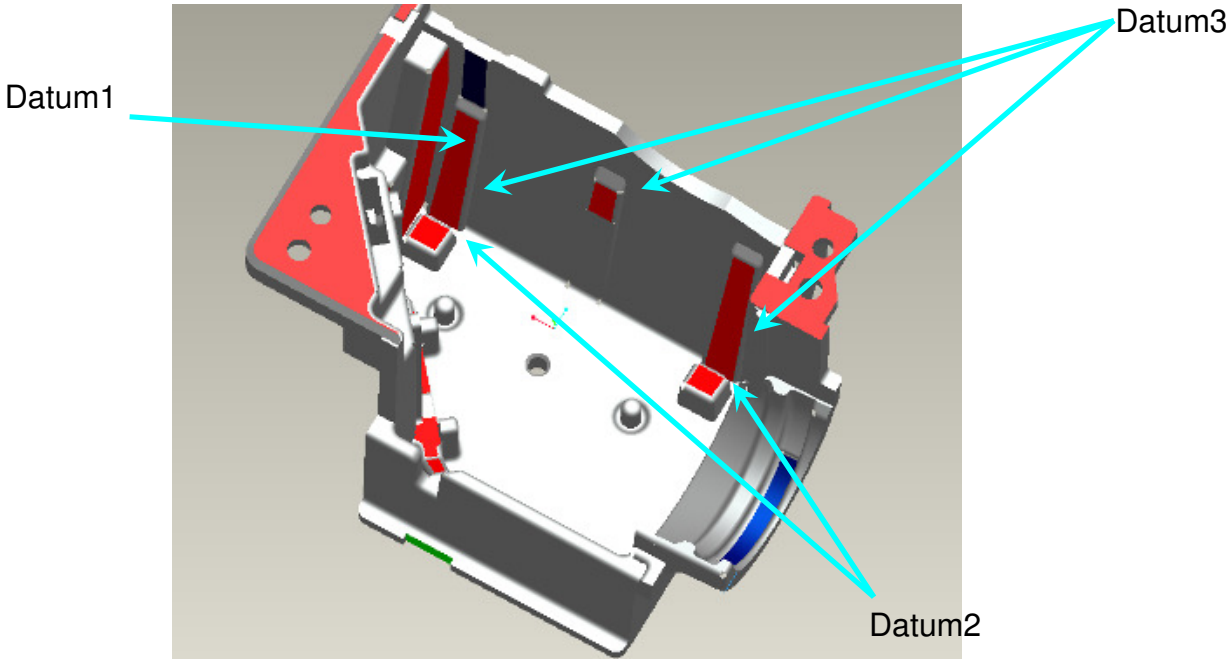

Fig. 3-8

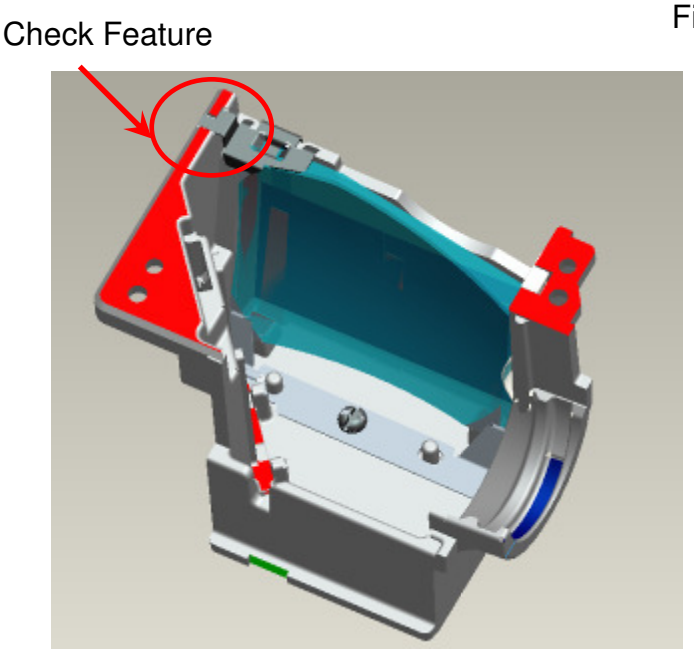

Fig. 3-9

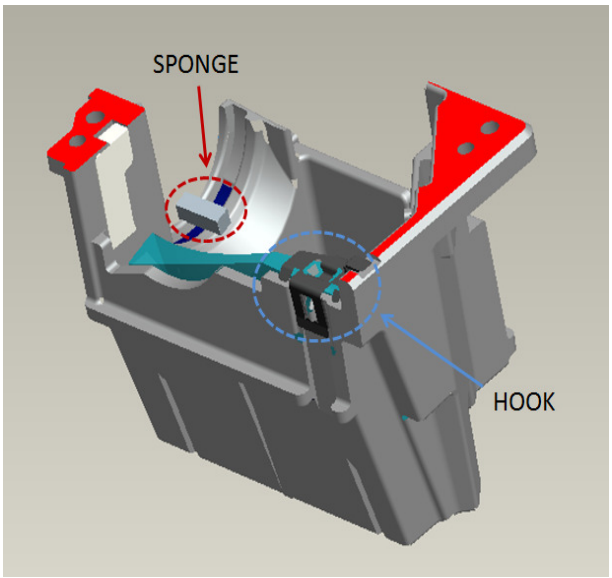

Fig. 3-10

- **For H6510BD:**

3.3 CM Assembly

(1) Assemble CM to Sub HSG and to make CM contact Sub HSG datum Well (Fig. 3-11, 3-12).

(2) Hook Clip CM to Sub HSG first and push it into the hole. (Fig. 3-13, 3-14).

(3) To check and make sure Clip CM hooks the Sub HSG Well (Fig. 3-15).

(4) Paste “Mylar Cover Sub” to cover “Clip CM” and ”Sub HSG” (Fig. 3-15).

(5) Paste “Sponge tube AL” on cannelure of”Sub HSG” (Fig. 3-15).

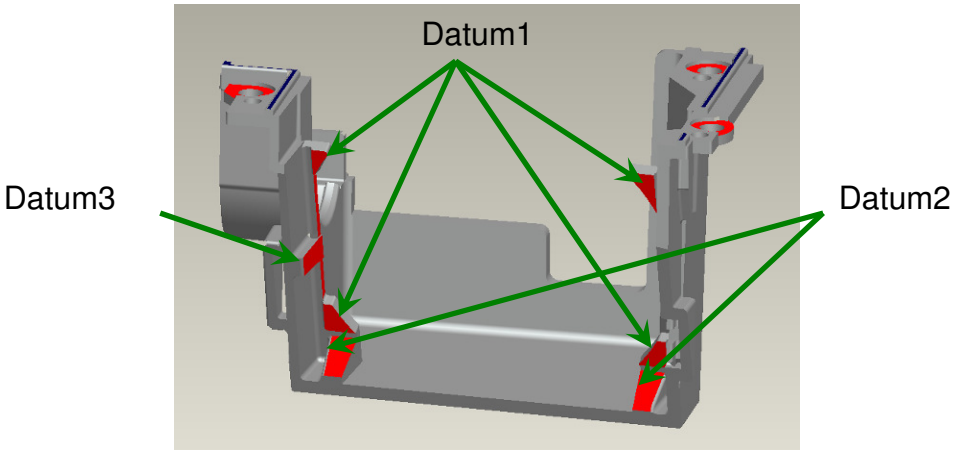

Fig. 3-11

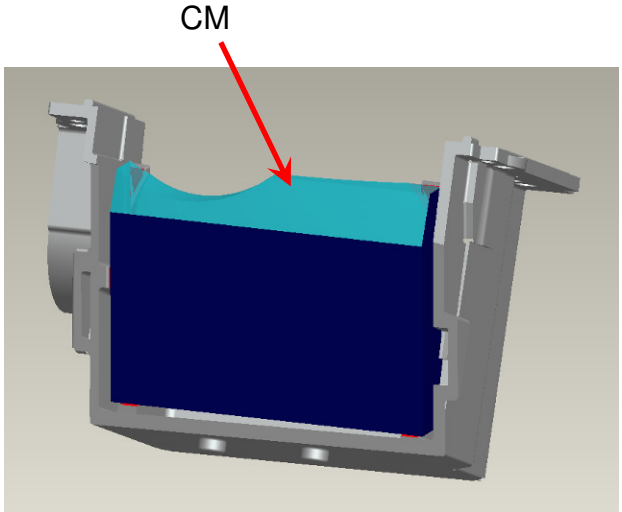

Fig. 3-12

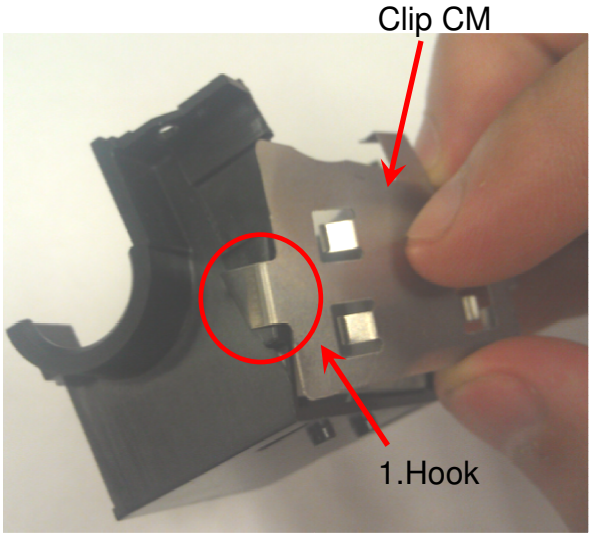

Fig. 3-13

1. Push it into the hole

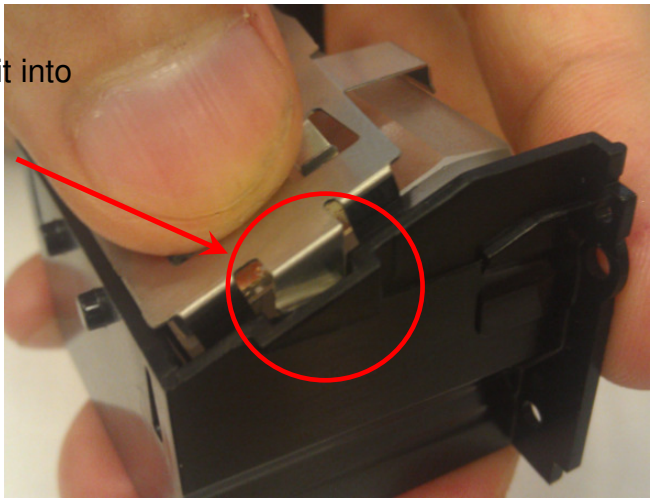

Fig. 3-14

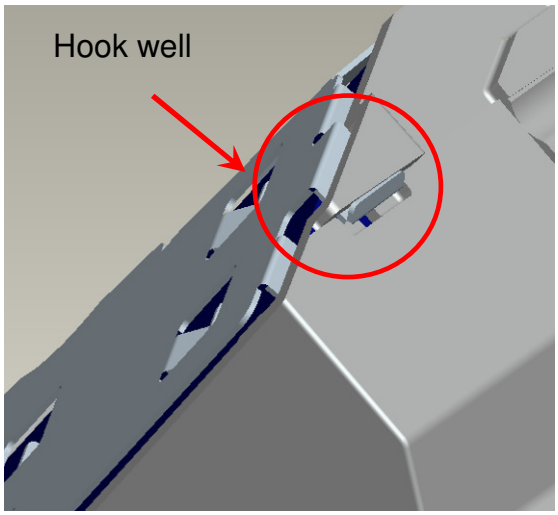

Fig. 3-15

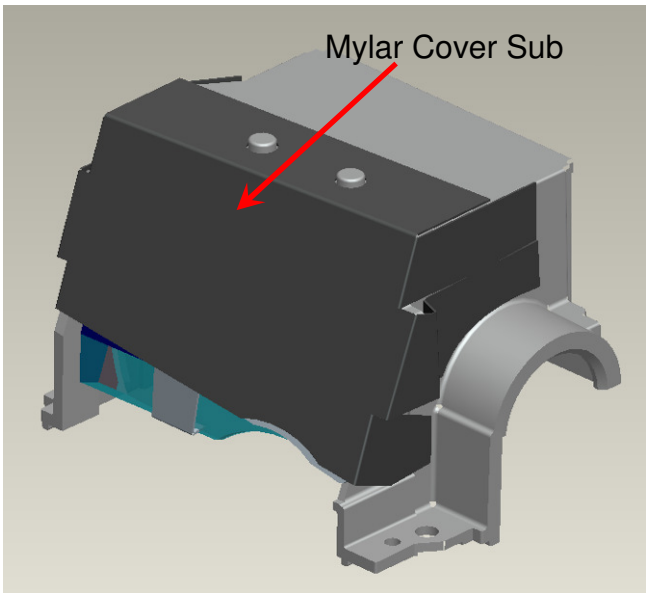

Fig. 3-16

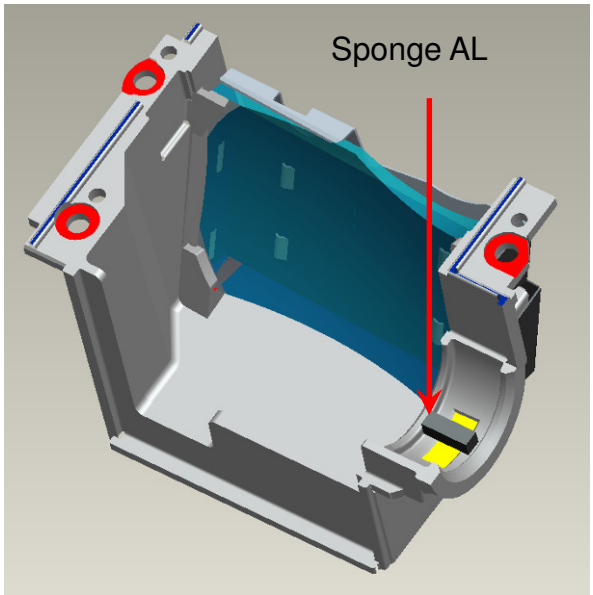

Fig. 3-17

4. AL, HSG ILL and HSG DMD Assembly:

- **For X1140A/X1240/X1140/P1340W/X1340WH:**

4.1 Placed “AL” on the “HSG DMD”. The “raised surface” of “AL” shall toward “DMD direction” (Fig. 4-1).

4.2 To assemble ”HSG ILL SUB Module” with “HSG DMD” and cover over on “AL” and the then lock with screws(Fig. 4-2).

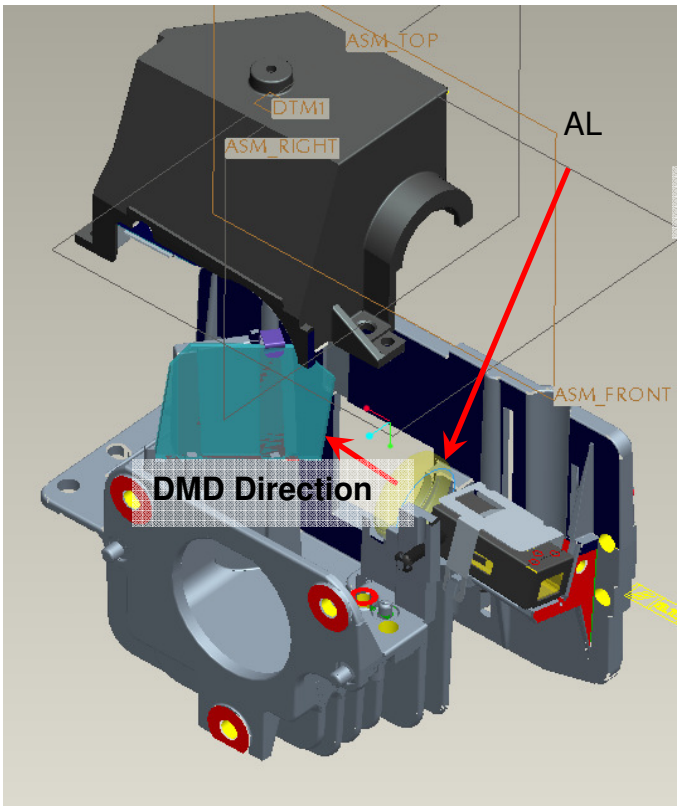

Fig. 4-1

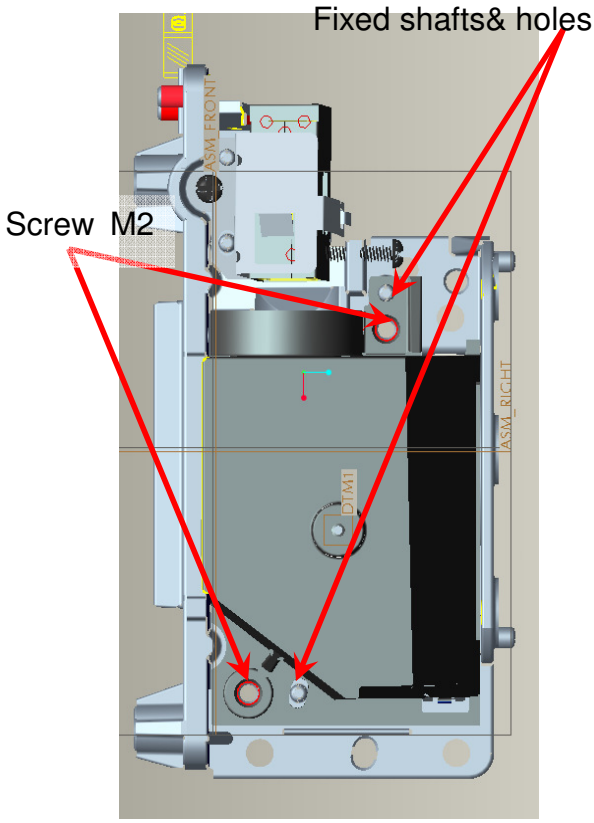

Fig. 4-2

- **For H6510BD:**

4.3 Placed “AL” on the “HSG DMD”. The “raised surface” of “AL” shall toward “DMD direction” (Fig. 4-3).

4.4 To assemble ” SUB HSG Module” with “HSG DMD” and cover over on “AL” and the then lock with screws(Fig. 4-4).

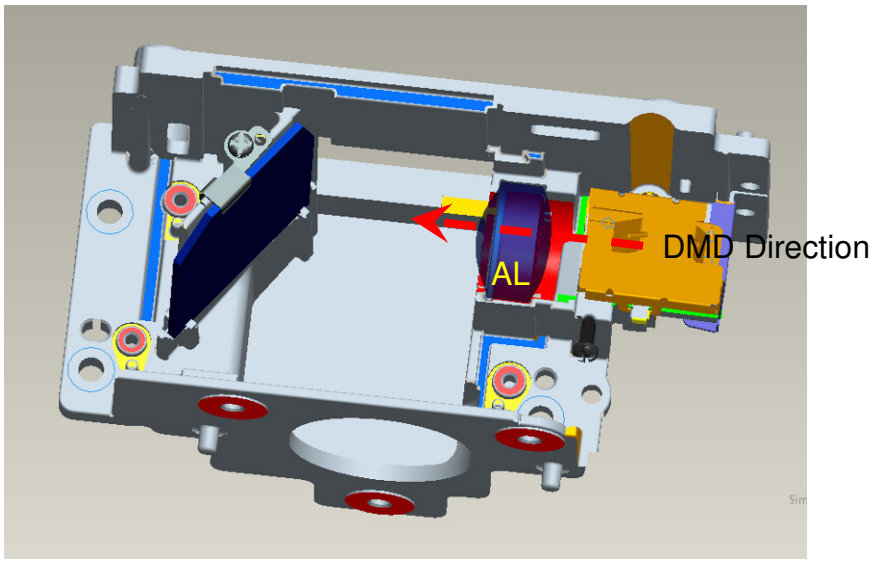

Fig. 4-3

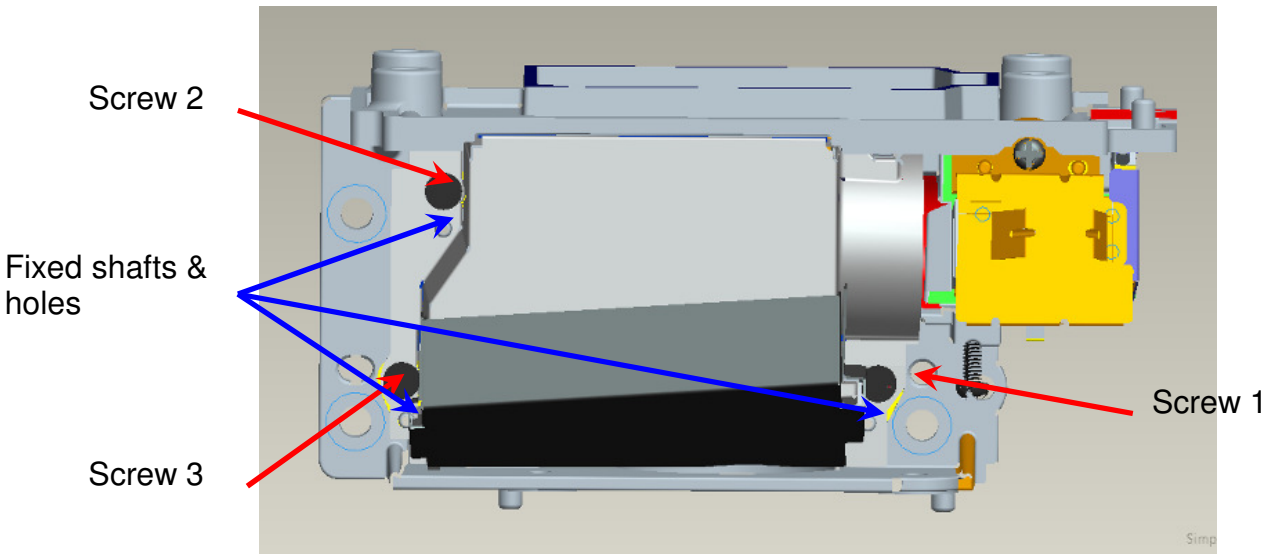

Fig. 4-4

4.5 Paste “Sponge Anti Dust” on Clearance between “Sub HSG” and “HSG DMD” (Fig. 4-5-1~2).

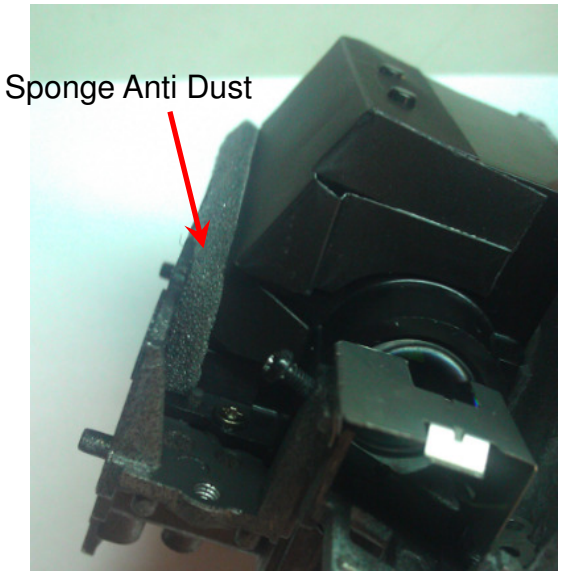

Fig. 4-5-1

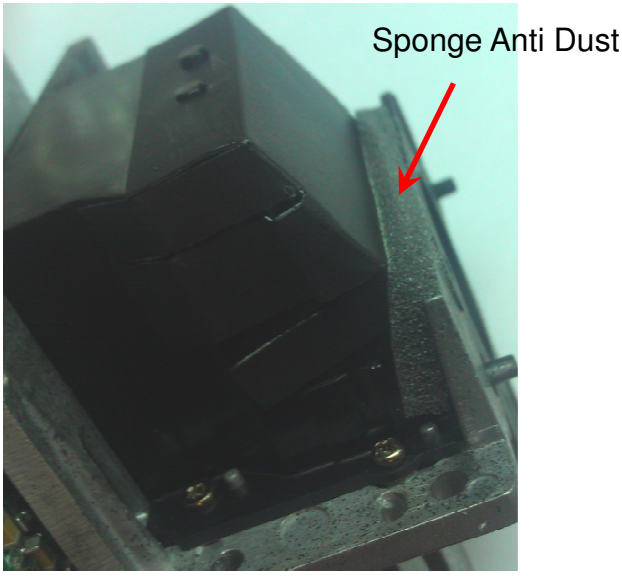

Fig. 4-5-2

5. DMD and Chip B/D Module:

5.1. Judge Chip B/D and DMD alignment keying first (Fig. 5-1, 5-2).

5.2. Alight keying and Assemble DMD to Chip B/D (Fig. 5-3).

5.3. Push DMD slightly and use screwdriver rotate clockwise button to lock (close notation) DMD on Chip B/D (Fig. 5-4).

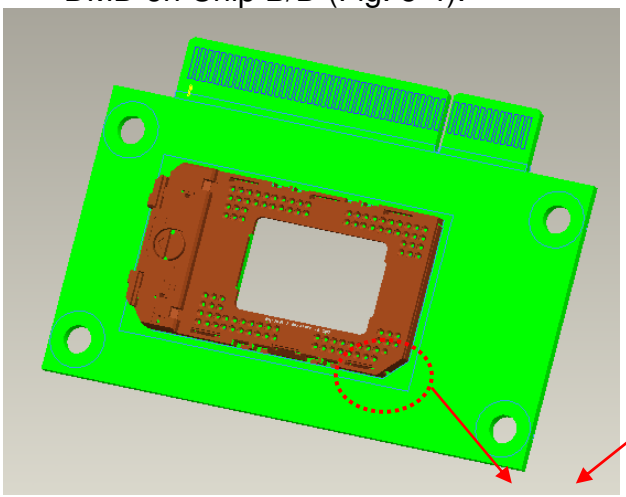

Fig. 5-1

Alignment keying

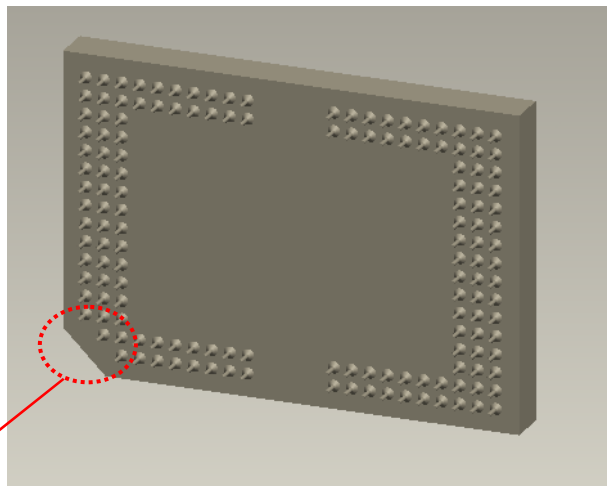

Fig. 5-2

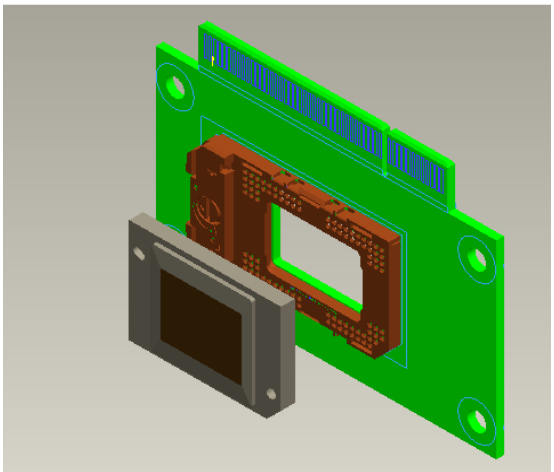

Fig. 5-3

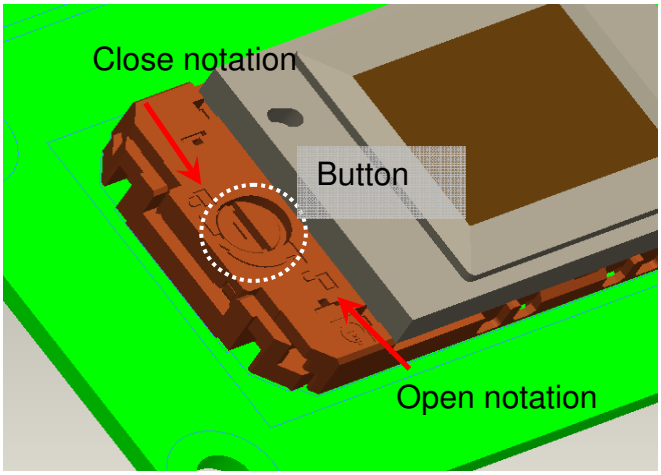

Fig. 5-4

6. Assembly Optical Engine:

6.1 Assemble “BKT Link Lamp & CW shield” on “DMD HSG” and then lock with screws well (Fig. 6-1).

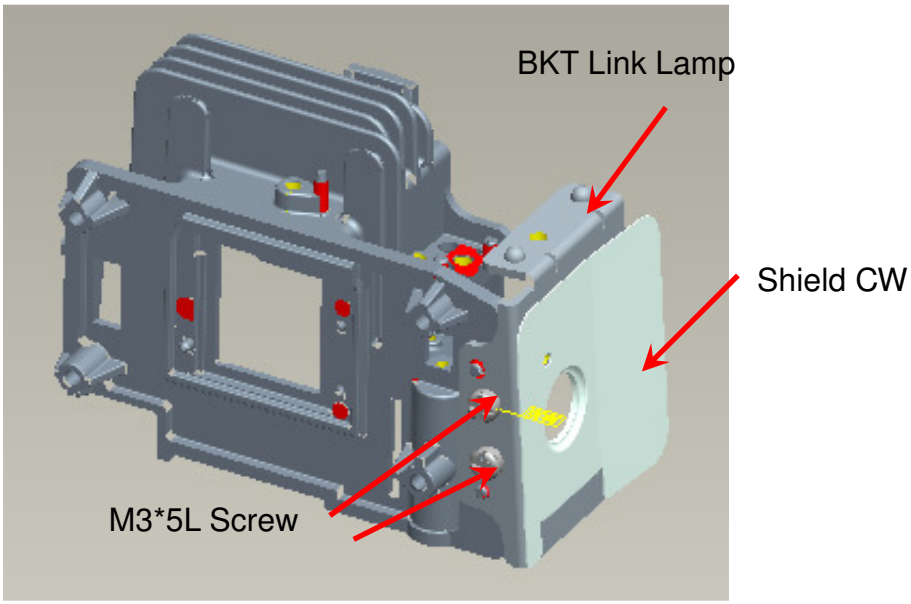

Fig. 6-1

7. Assembly OP ENG

7.1 Assemble “Baffle DMD” to “HSG DMD” (Fig.7-1-1, 7-1-2).

7.2 Assemble “Sponge DMD” to “HSG DMD” (Fig. 7-1-1, 7-1-2)

7.3 Assemble Chip B/D Module to “HSG DMD” (Fig. 7-2).

- **For X1140A/X1240/X1140:**

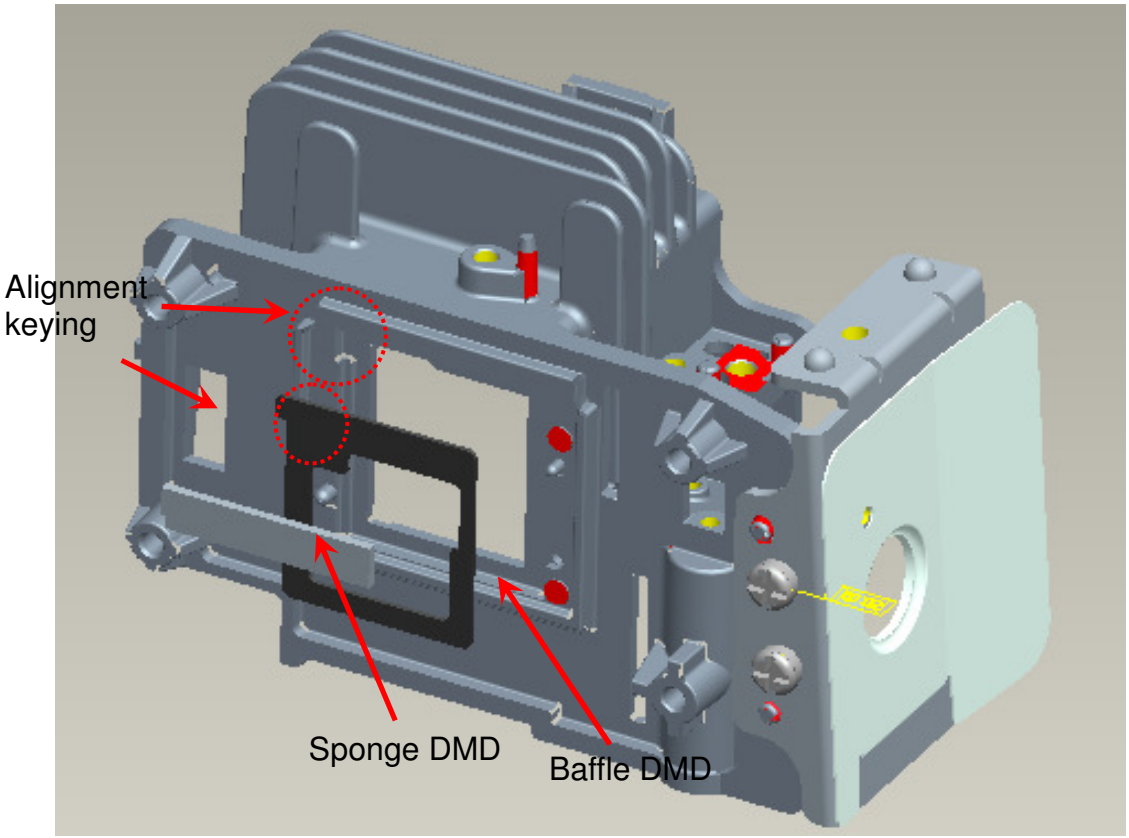

Fig.7-1-1

- **For P1340W/X1340WH:**

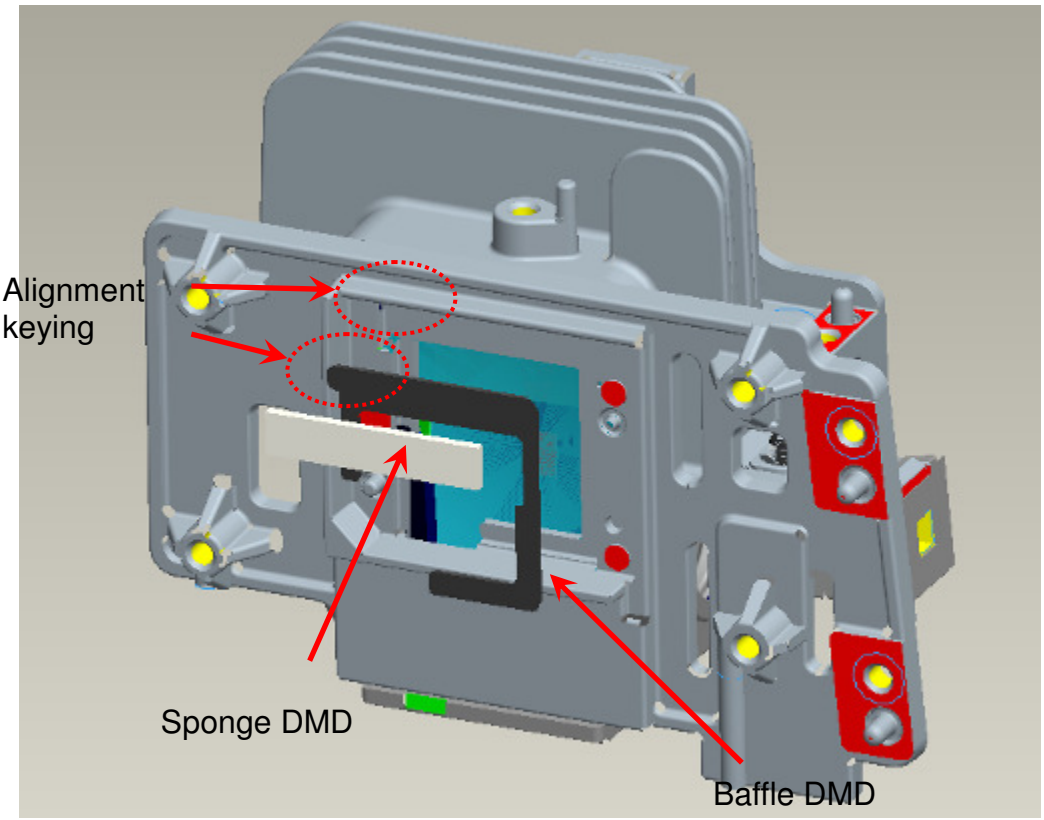

Fig. 7-1-2

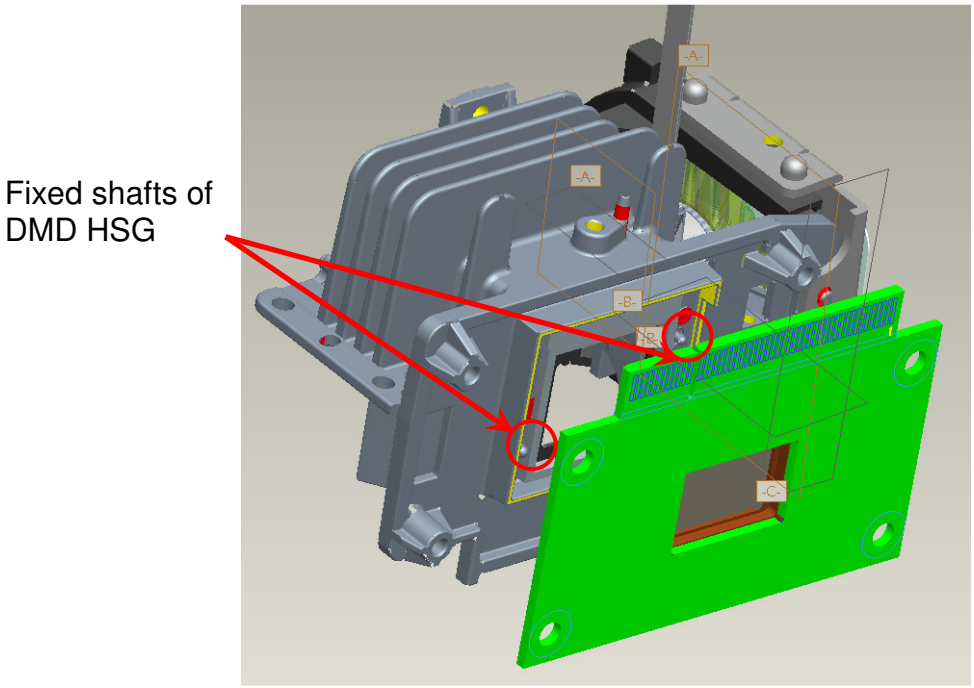

Fig.7-2-1

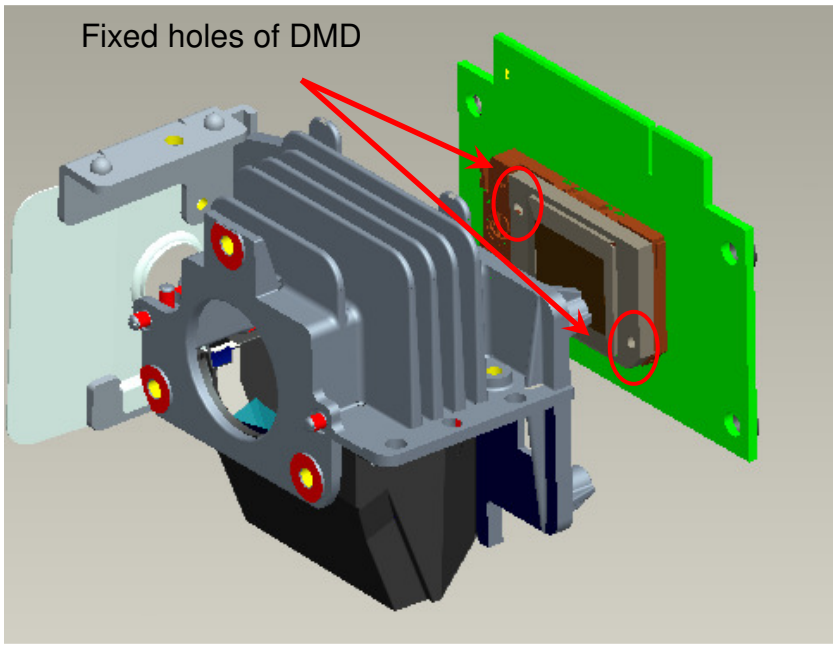

Fig.7-2

- **For H6510BD:**

  (1) Assemble “Baffle DMD” to “HSG DMD” (Fig.7-3).

  (2) Assemble Chip B/D Module to “HSG DMD” (Fig. 7-4, Fig. 7-5).).

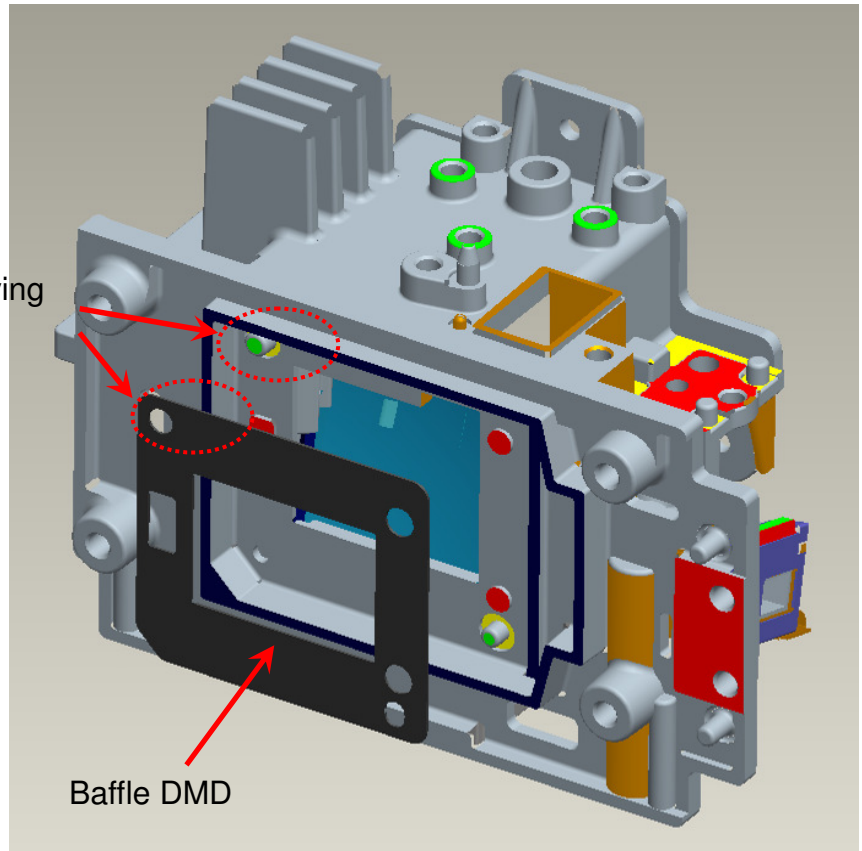

Fig. 7-3

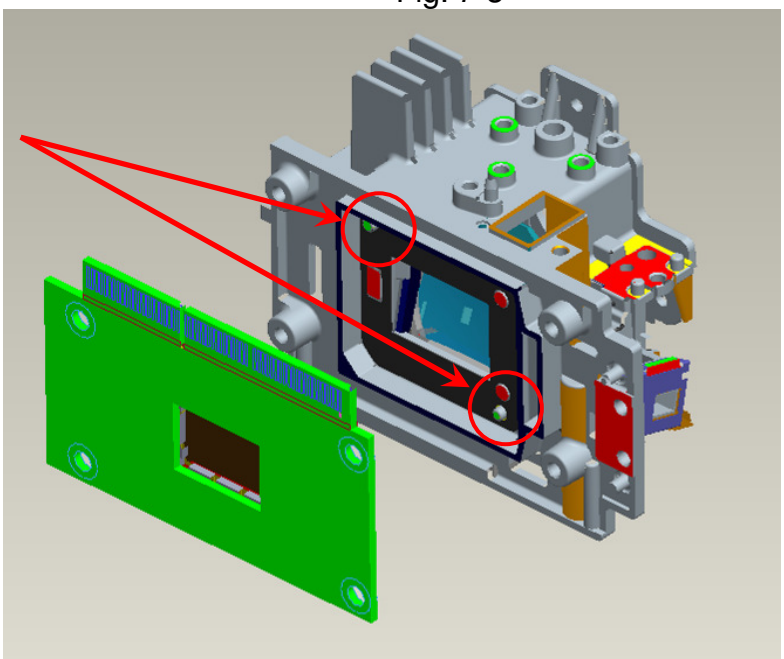

Fig.7-4

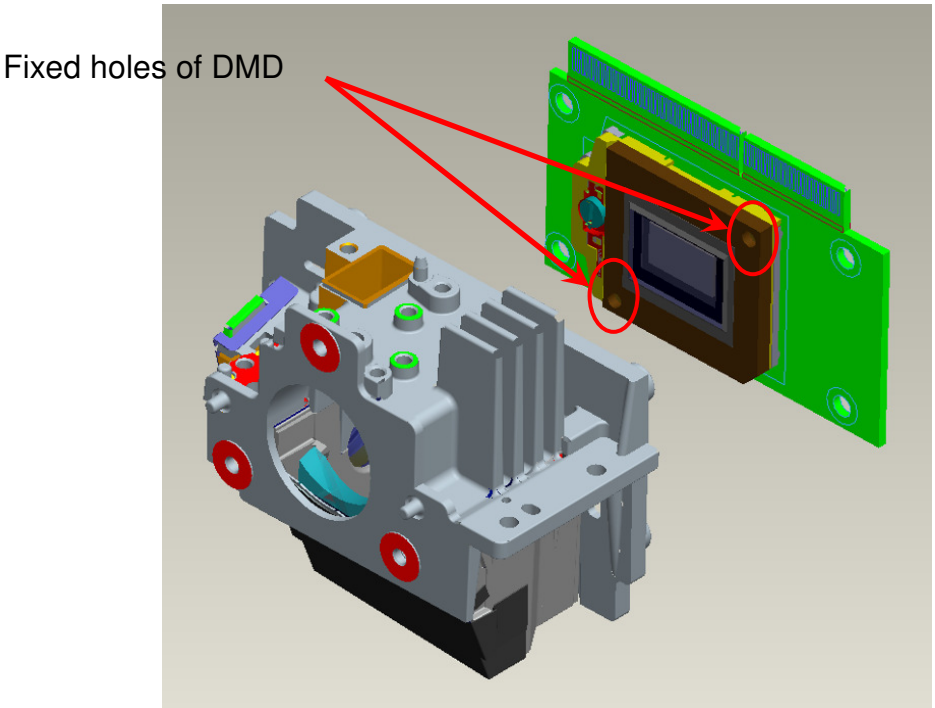

Fig.7-5

7.4 Assemble Thermal Pad & Gasket Hest-sink then place contact DMD (Fig. 7-6-1).

(1) Press center of Heatsink before assemble spring screw*4, then keeps press until spring screw assembly finish.

(2) Pre-fastening Sequence: [1] - [2] - [3] - [4].

(3) Fastening Sequence: [2] - [1] - [4] - [3].

(4) Screw Torque must be confirmed to be 6 kg-cm.

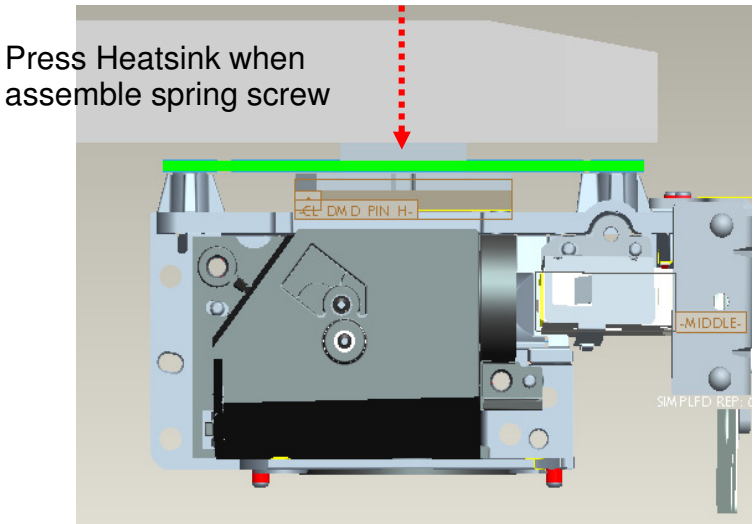

Fig. 7-6-1

- **For X1140A/X1240/X1140/P1340W/X1340WH:**

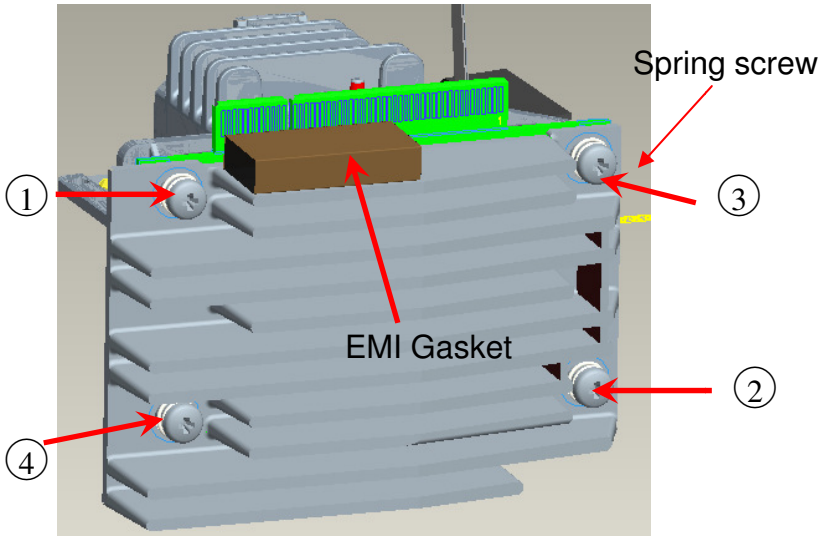

Fig. 7-6-2

- **For H6510BD:**

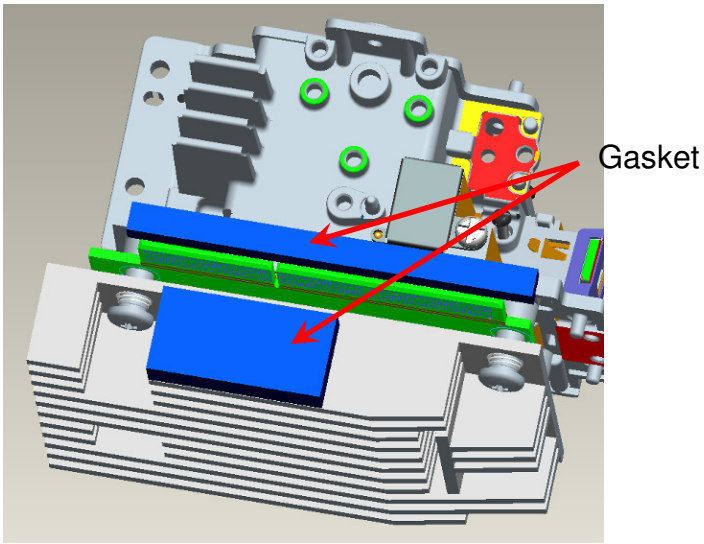

Fig. 7-6-3

Assemble “CW Module” and “Cover HSG DMD” to “DMD HSG” then lock with screws well (Fig.7-6-4).

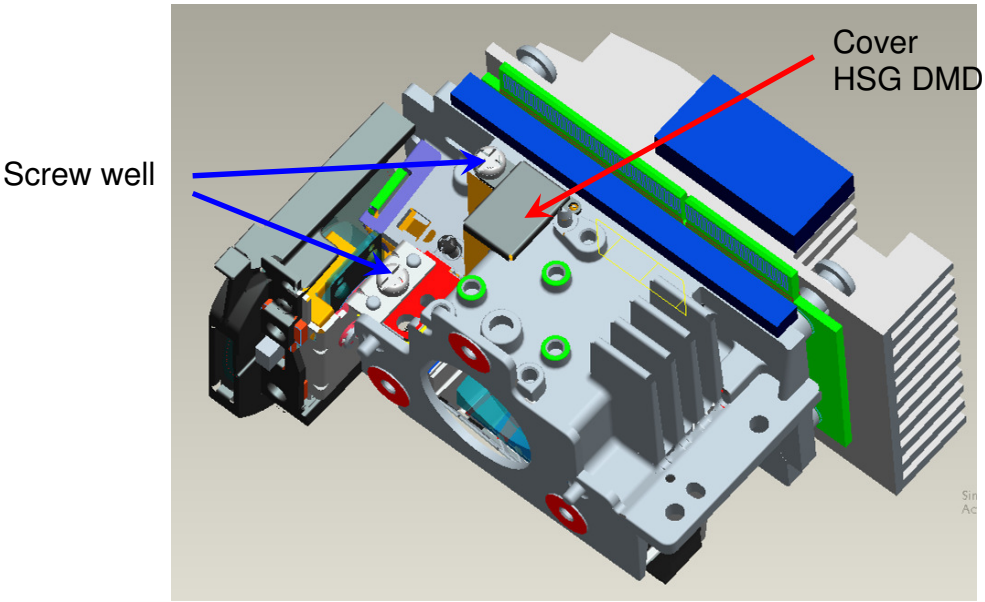

Fig. 7-6-4

7.5 Assemble “CW Module” to “DMD HSG” and lock with screws well (Fig.7-4).

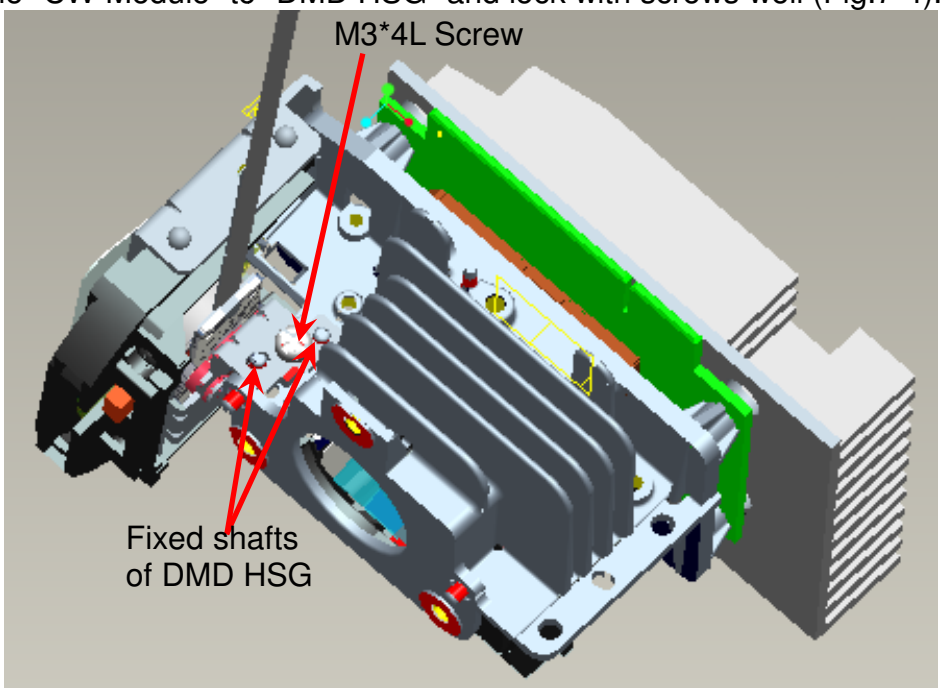

Fig.7-4

7.6 Assemble “Sponge Antidust” well (Fig. 7-5-1~2).

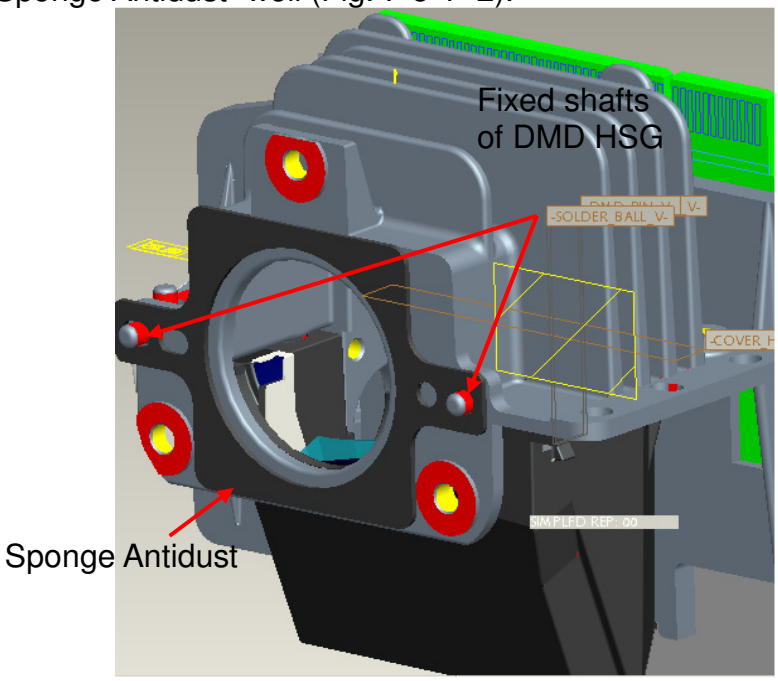

Fig.7-5-1

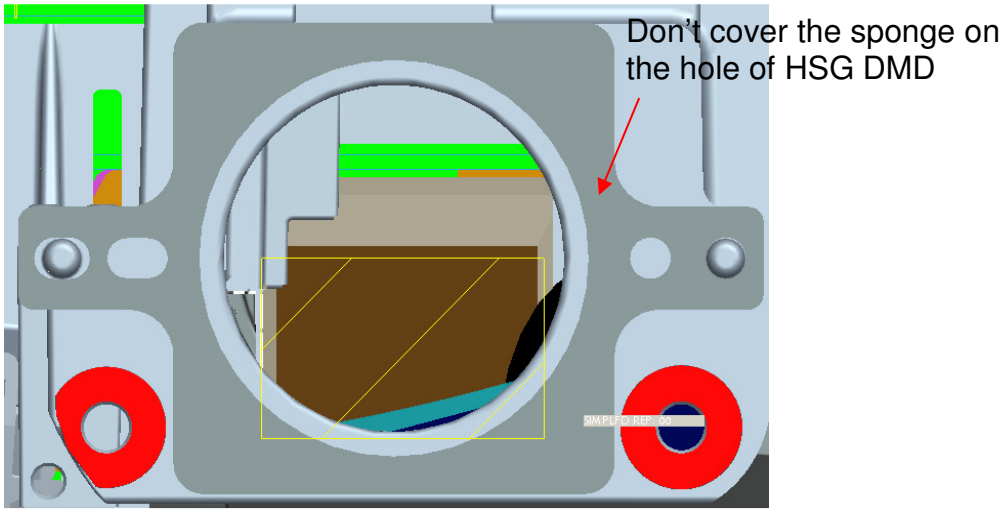

Fig.7-5-2

7.7 Assemble “PL Lens” and lock with screws well (Fig. 7-6).

(1) Assemble Lens and the Assembly direction must be horizontal, and do not impact CM.

(2) Pre-fasten Screws firstly. Screw Torque must be confirmed to be 1-2 kg-cm. (Fig. 7-6)

(3) Fasten the Screws well. Screw Torque must be confirmed to be 2.5-3.5 kg-cm. (for H6510BD, Torque is 4.0-5.0 kg-cm.)(Fig. 7-6)

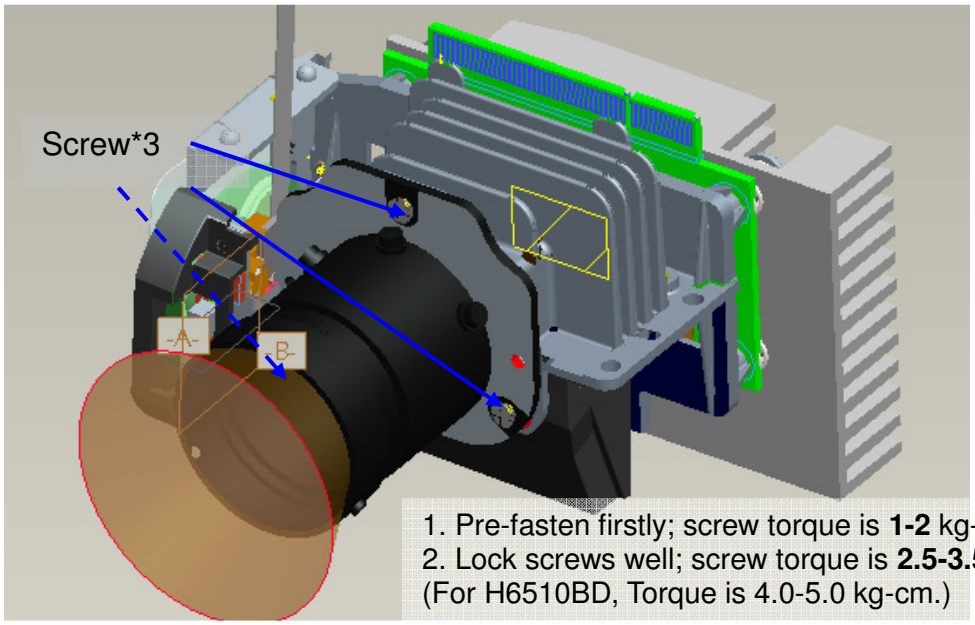

Fig.7-6

7.8 Assemble “Ring Zoom” and lock with screws well (Fig. 7-7).

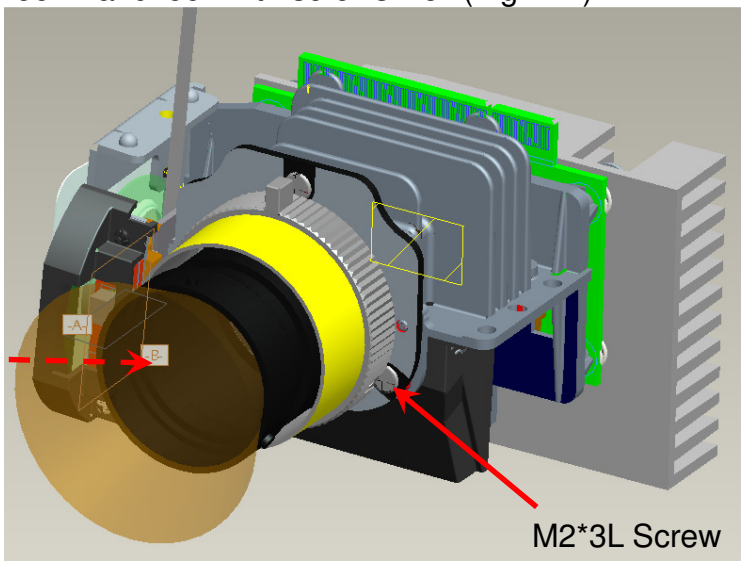

Fig.7-7

7.9 Assemble “Ring Focus” well (Fig. 7-8).

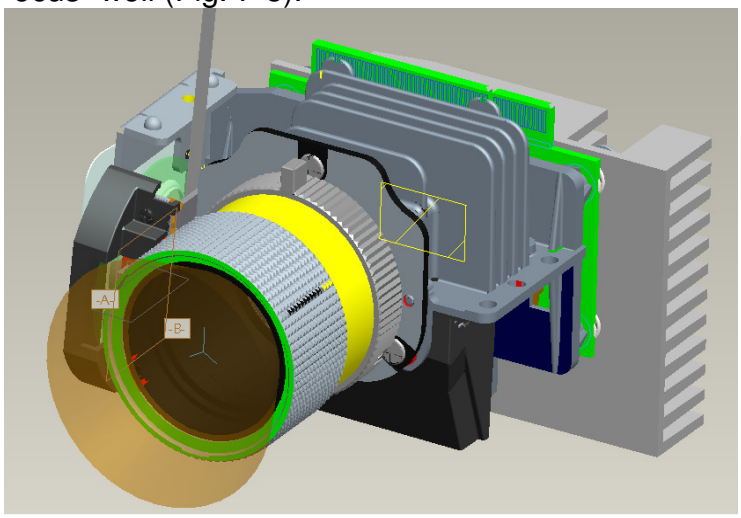

Fig.7-8

Module Assembly Key Point - Mechanical

1. Lower case module assembly

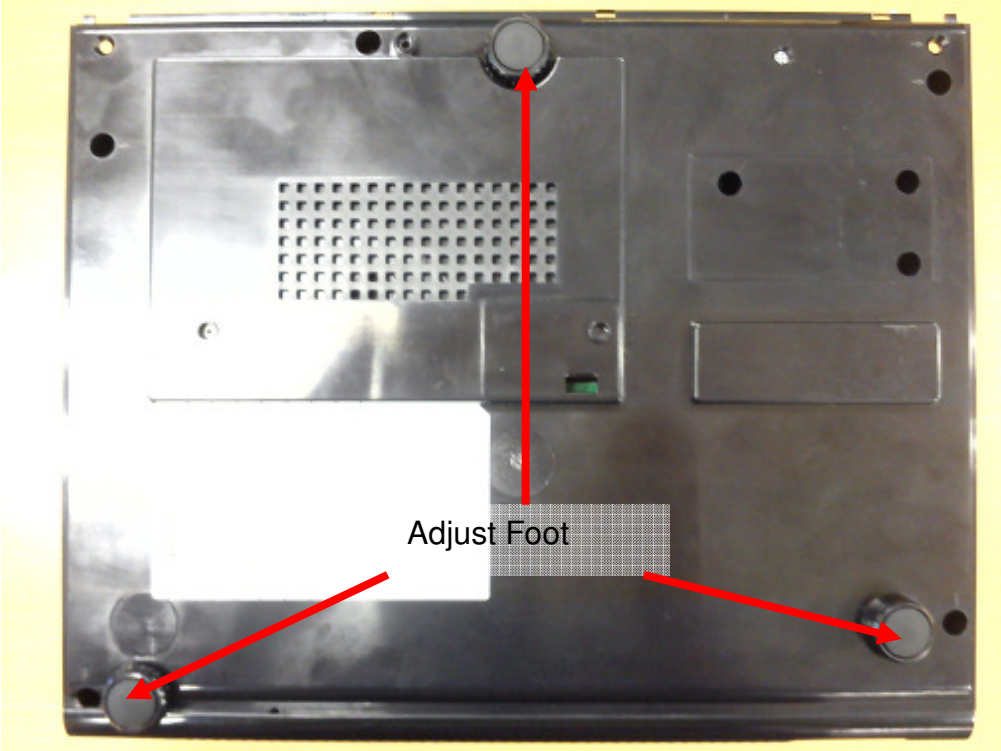

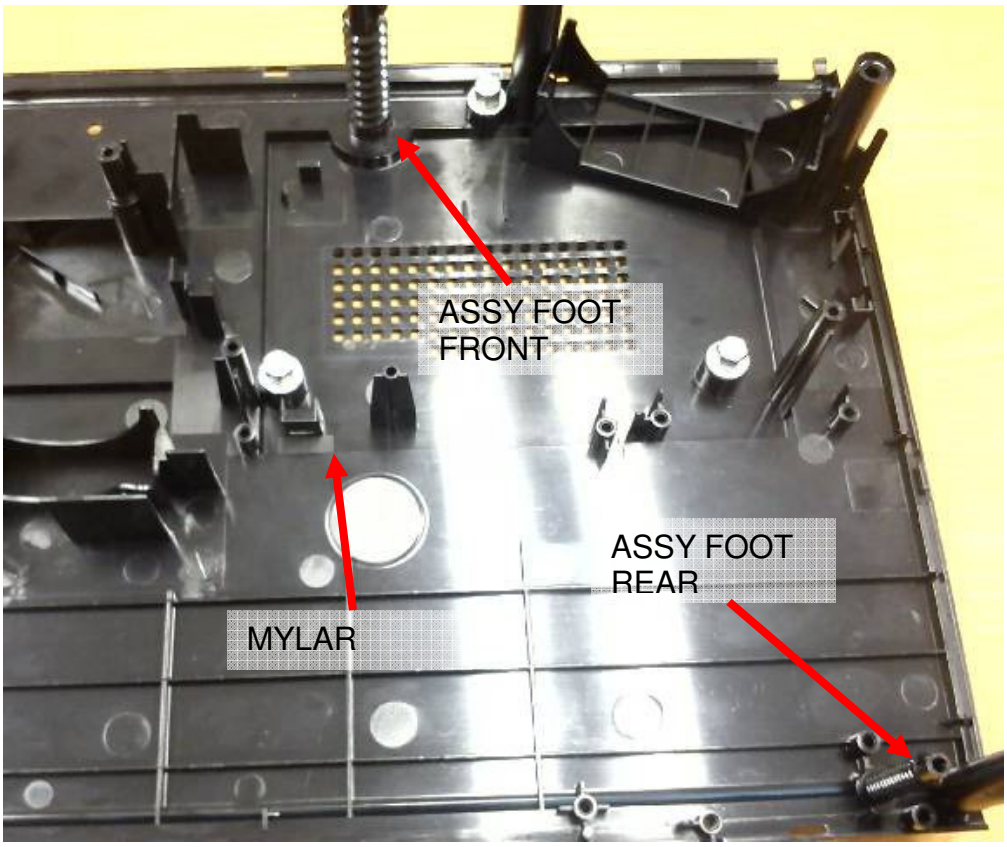

(For H6510BD) : Add a sponge on lower case

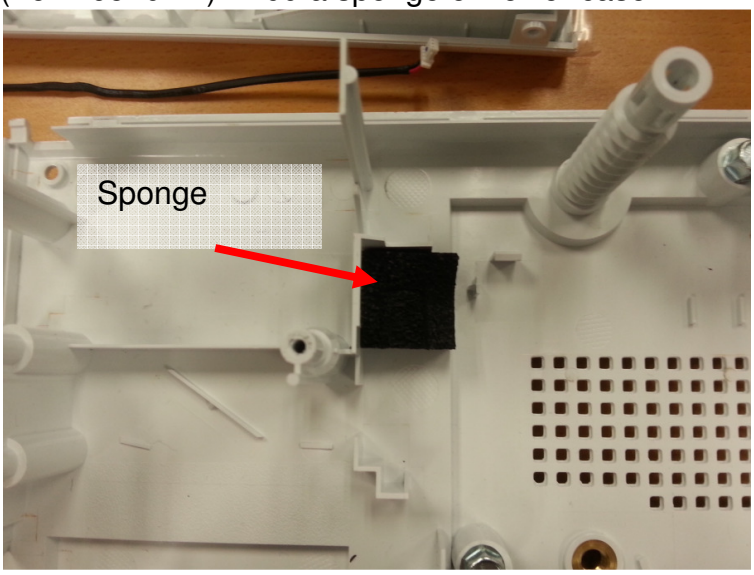

2. Assemble power board with ballast cable on lower case

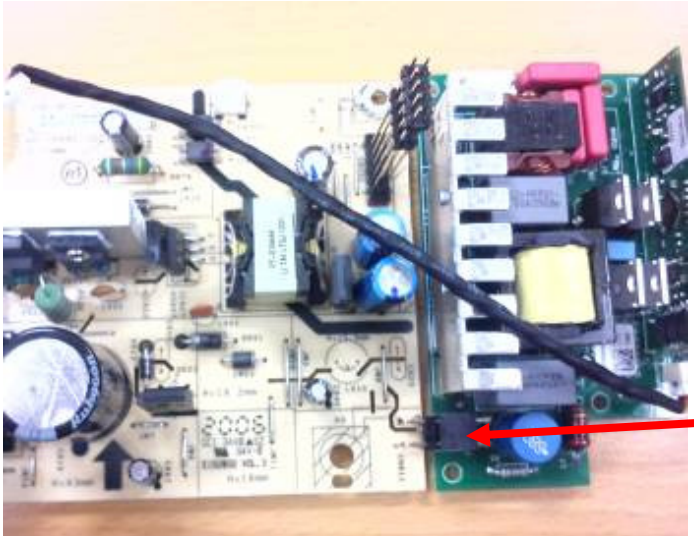

Notice : Connect power board with ballast board at first

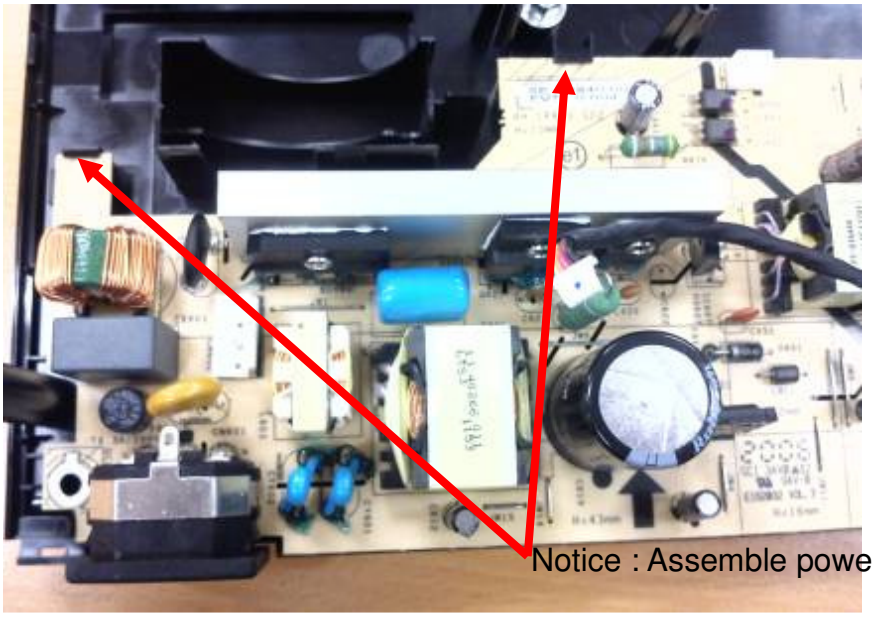

Notice : Assemble power board into these 2 hooks

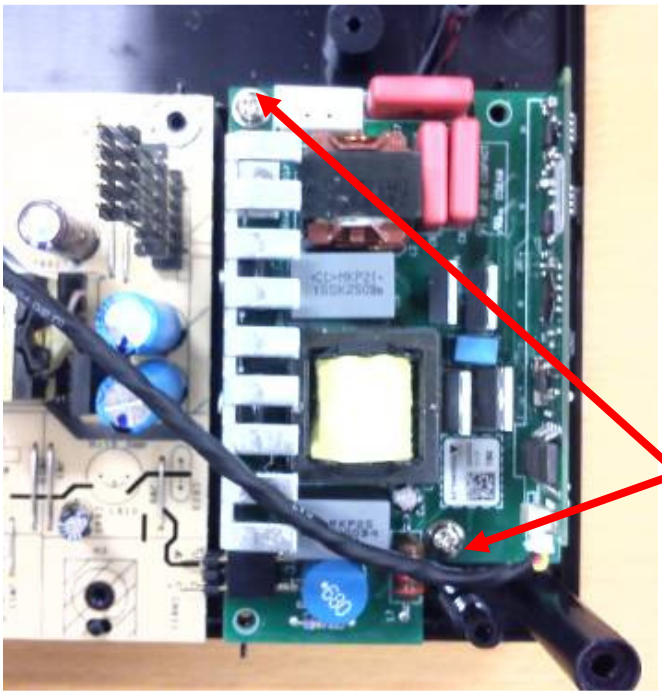

Notice: Power board must be go through these 2 boss

3. Assemble lamp box assembly on lower case

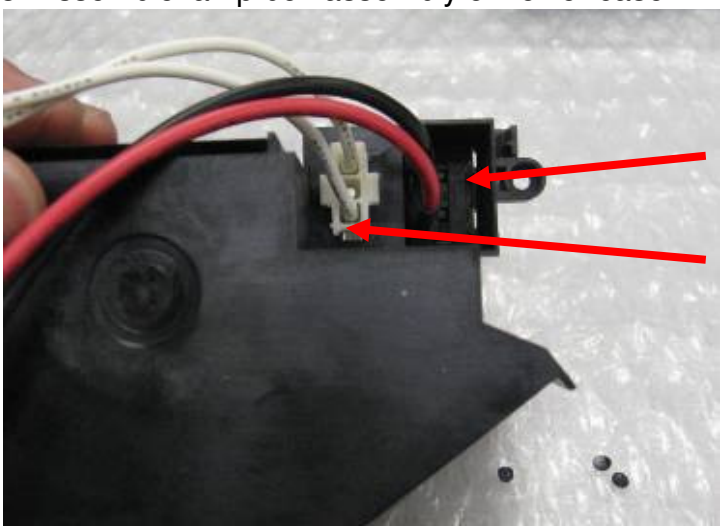

Door switch wire

Lamp wire

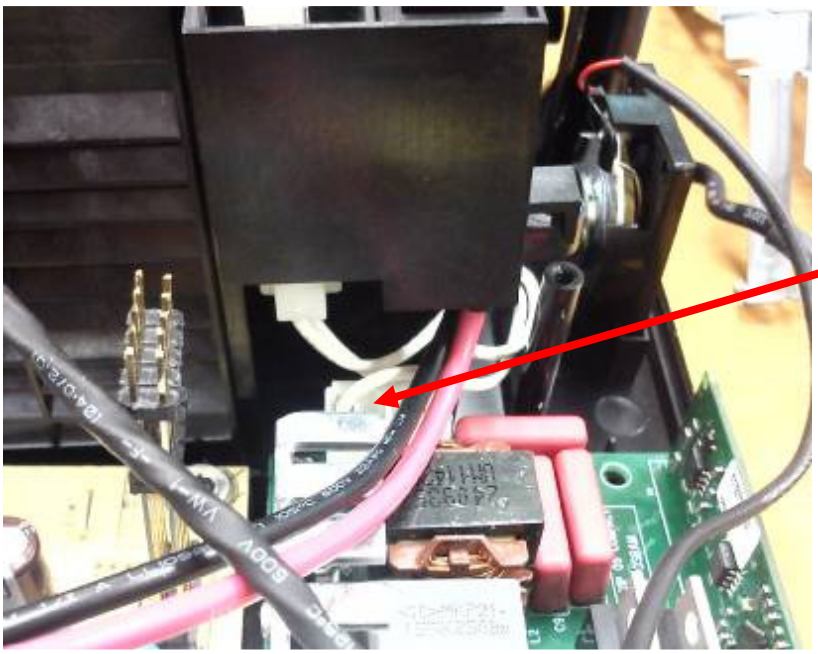

Plug lamp wire first

Notice: lamp wire cable routing

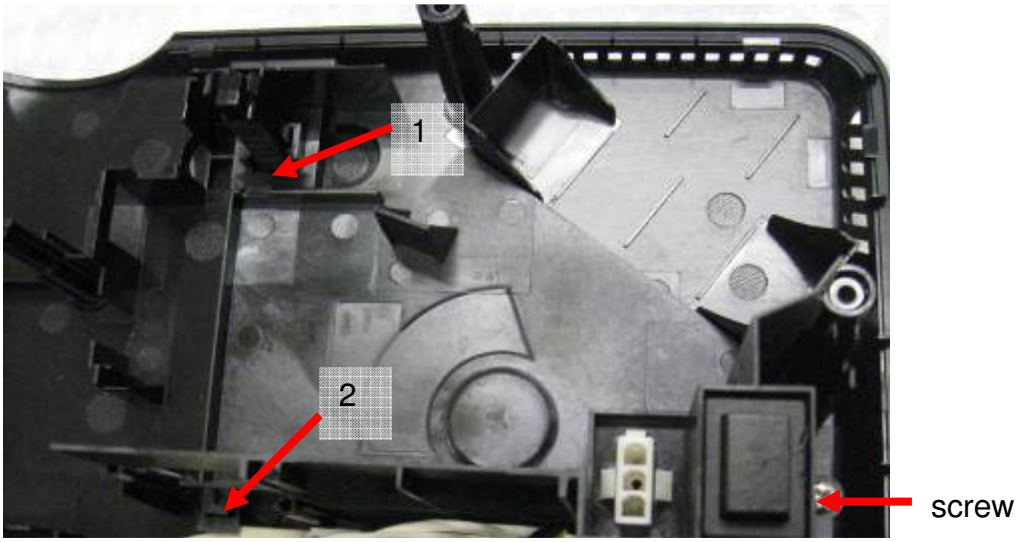

4. Assemble nozzle assembly on lower case

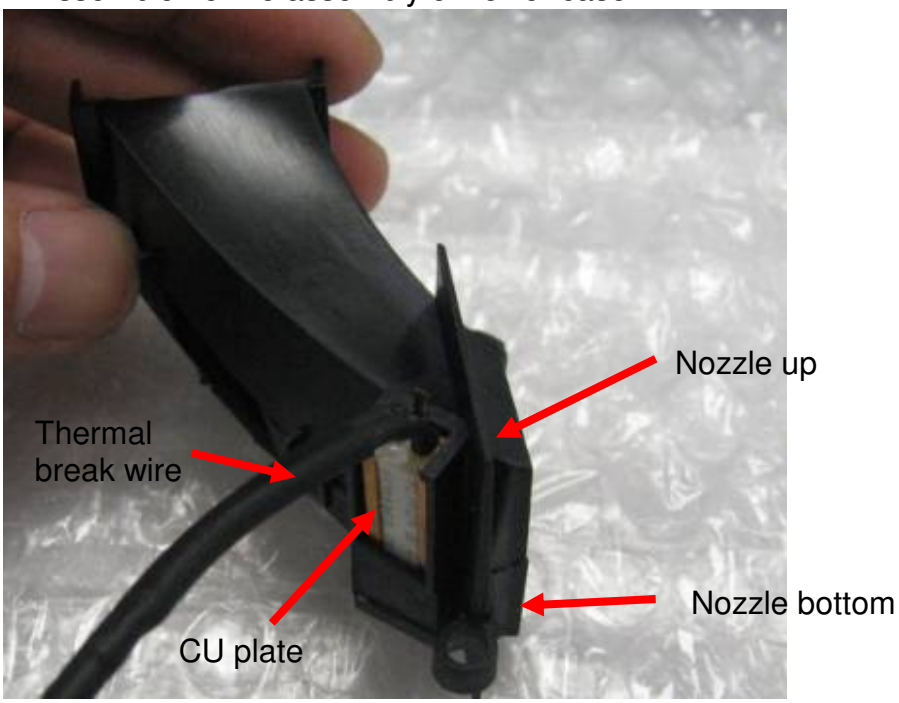

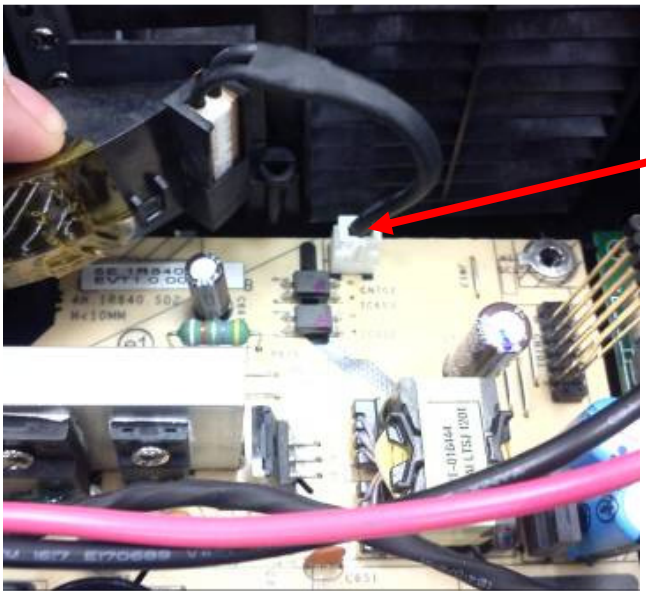

Plug lamp wire

5. Assemble speaker & FAN with cable on lower case

FAN

Speaker & FAN wire must be under this hook

Speaker

6. Cable routing of thermal break wire & door switch wire

- **For X1140A/X1240/X1140/P1340W/X1340WH:**

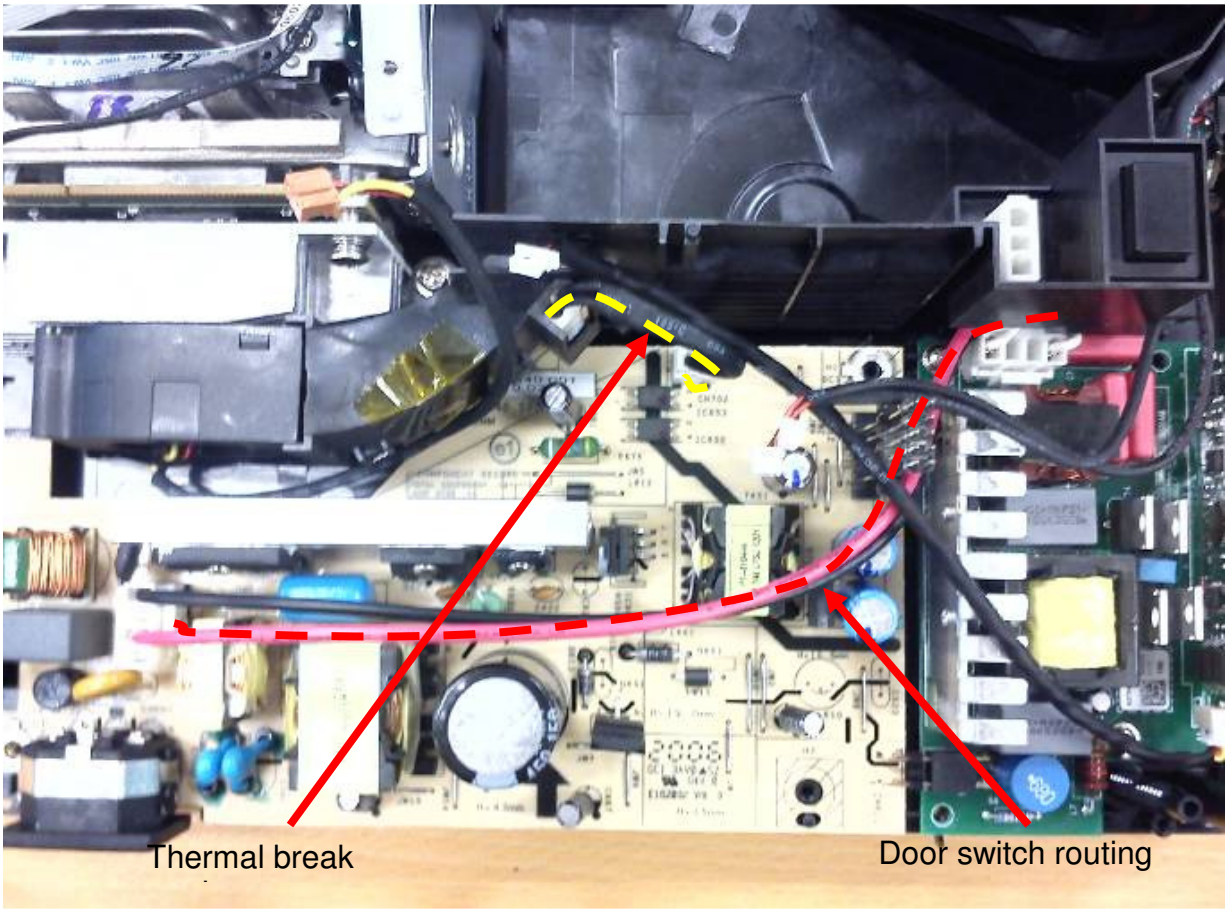

- **For H6510BD:**

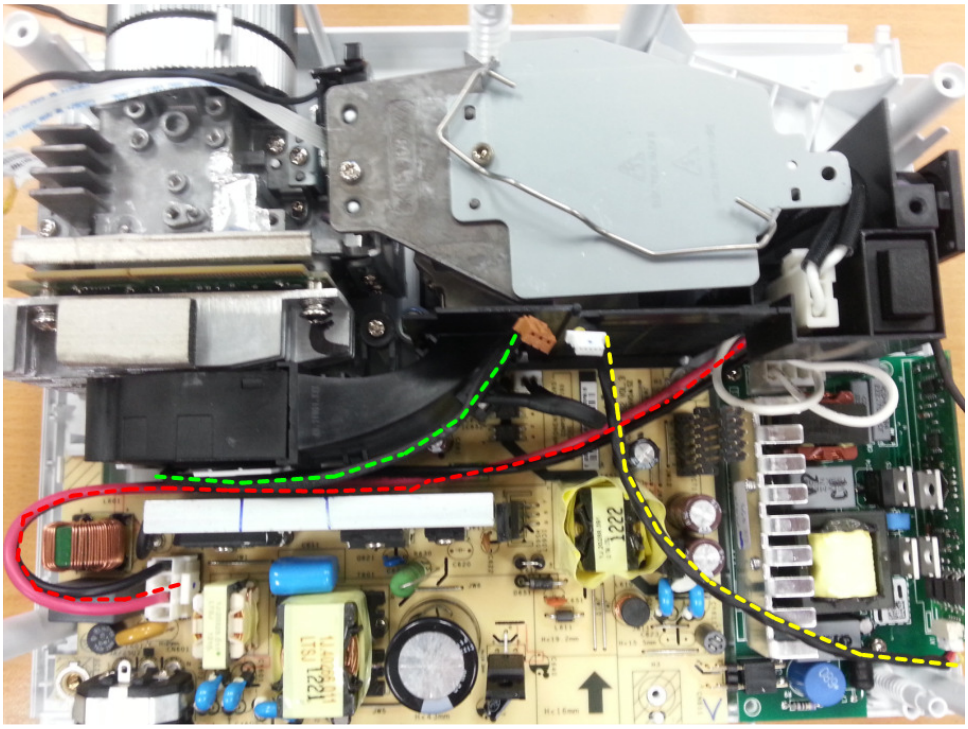

7. Assemble engine assy and EMI gasket on lower case
Add gaskets on OPT to contact main frame

- **For X1140A/X1240/X1140:**

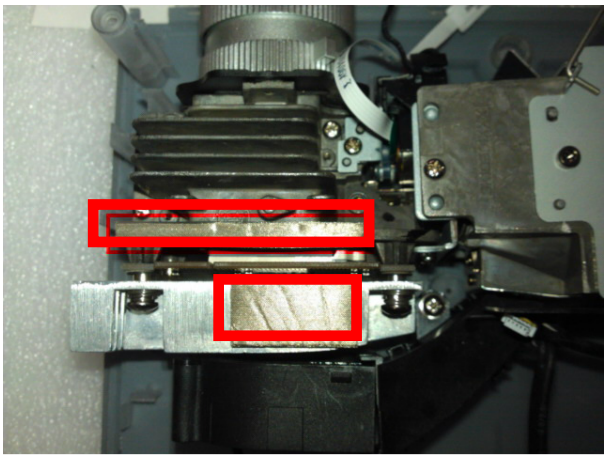

- **For P1340W:**

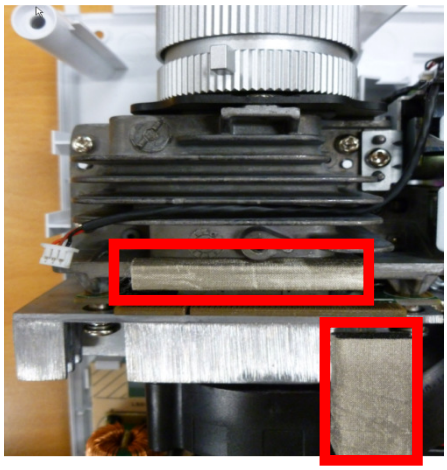

- **For X1140A/X1240/X1140/P1340W/X1340WH:**

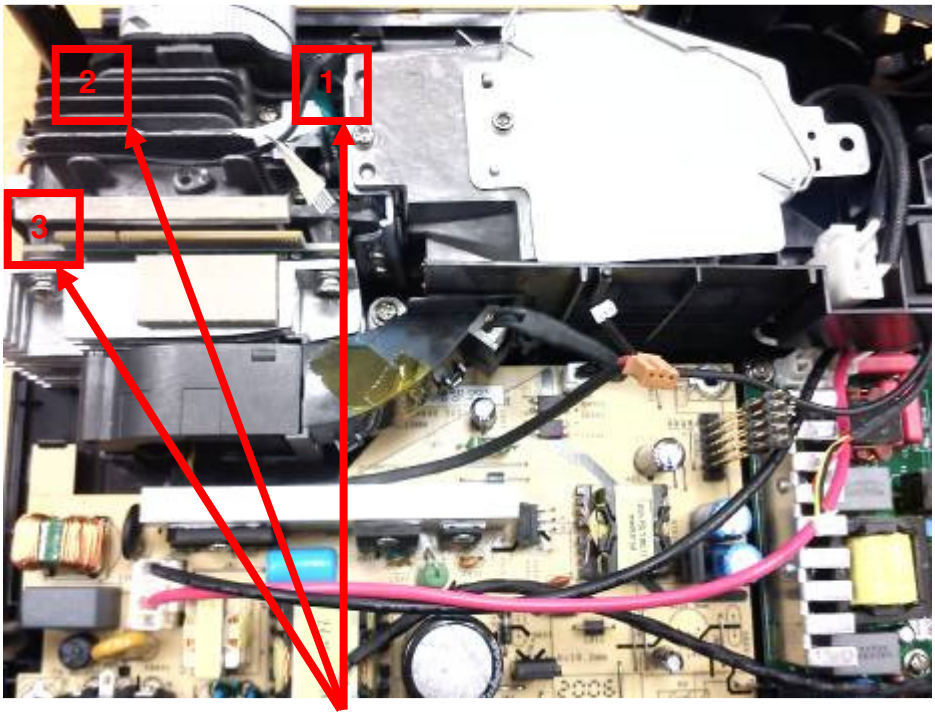

Screw*3

- **For H6510BD :**

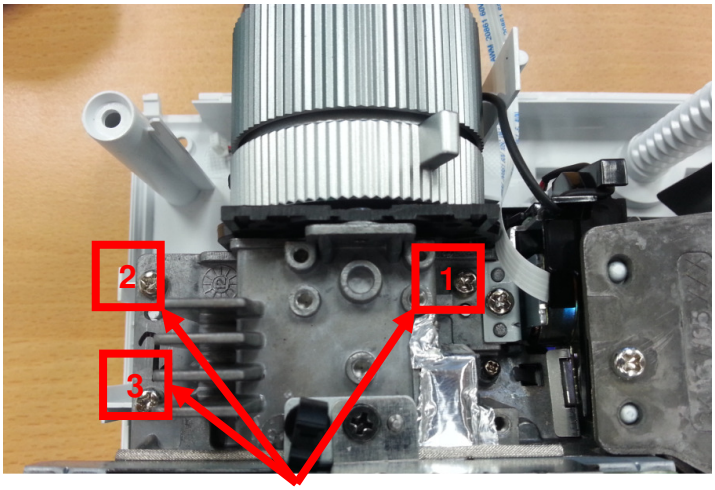

Screw*3

8. Assemble main bracket.

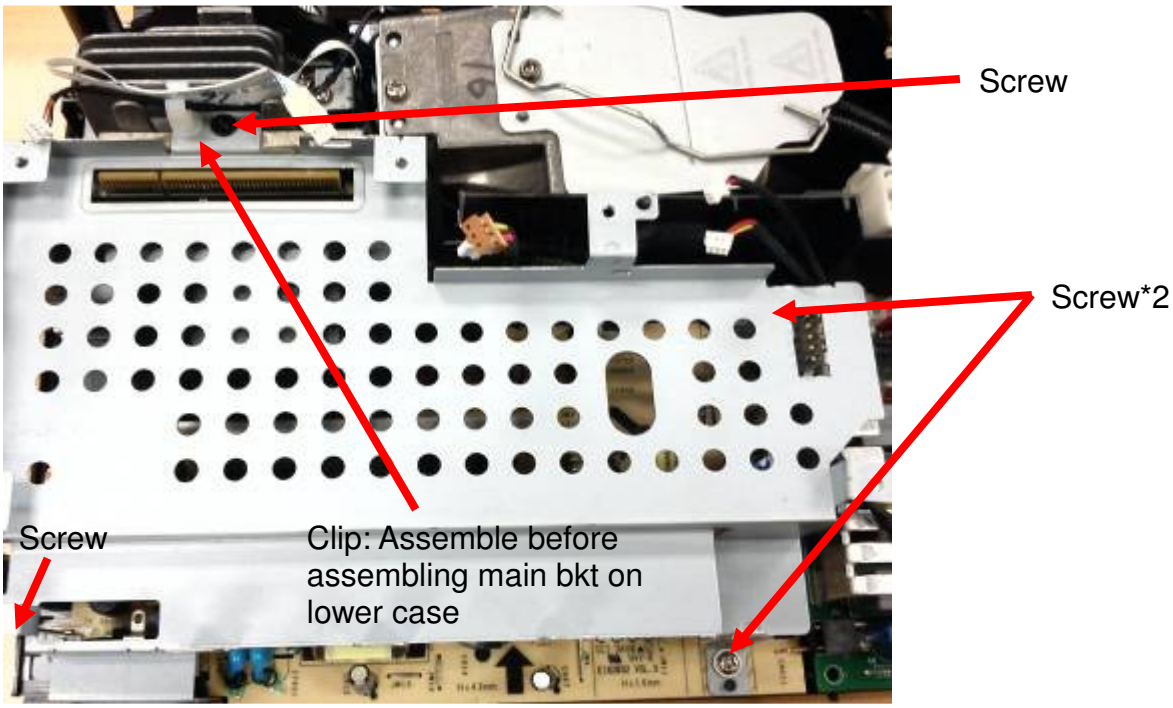

9. Assemble main board and main shielding Plug cable

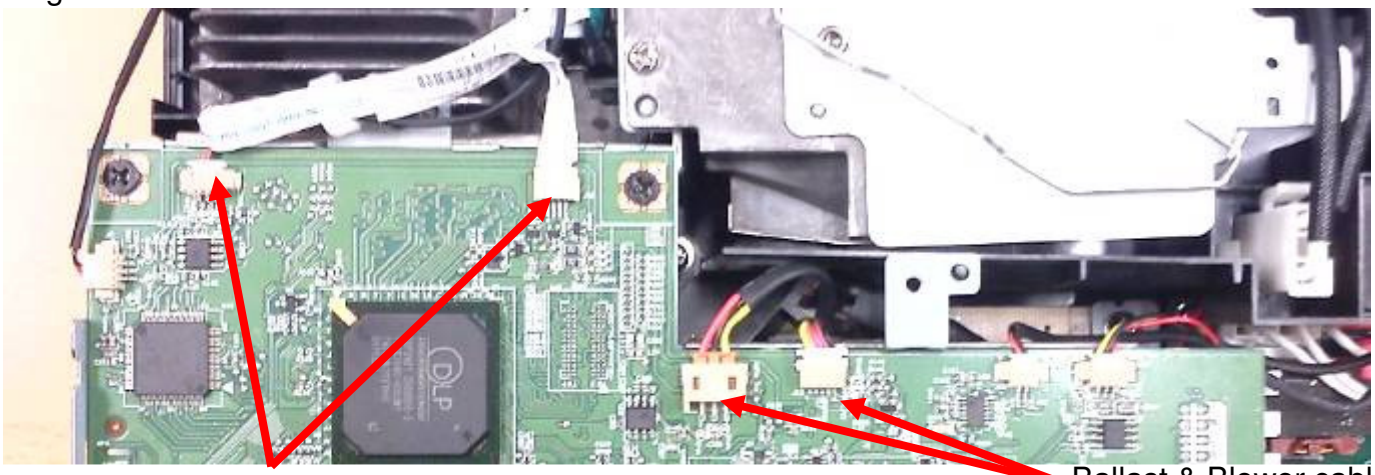

Assemble sequence: 1. CW FFC 2. CW cable

Ballast & Blower cable goes under blower cable and main Bkt

- **For X1140A/X1240/X1140:**

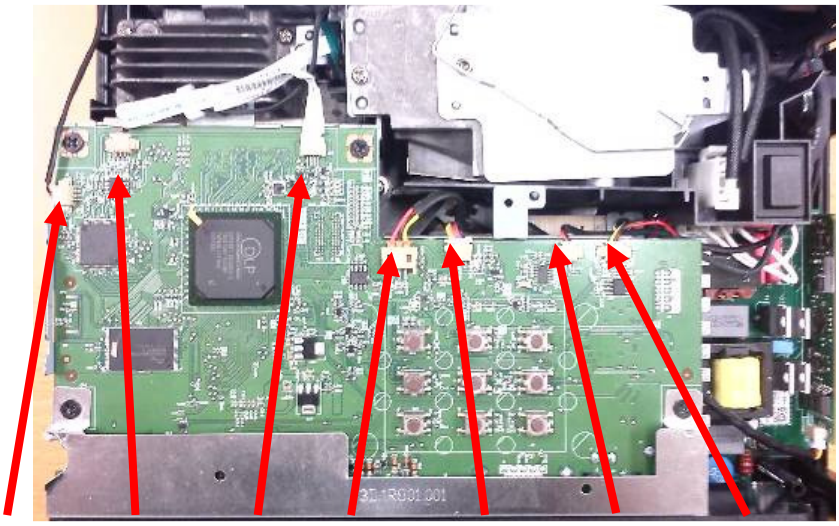

- **For P1340W/X1340WH:**

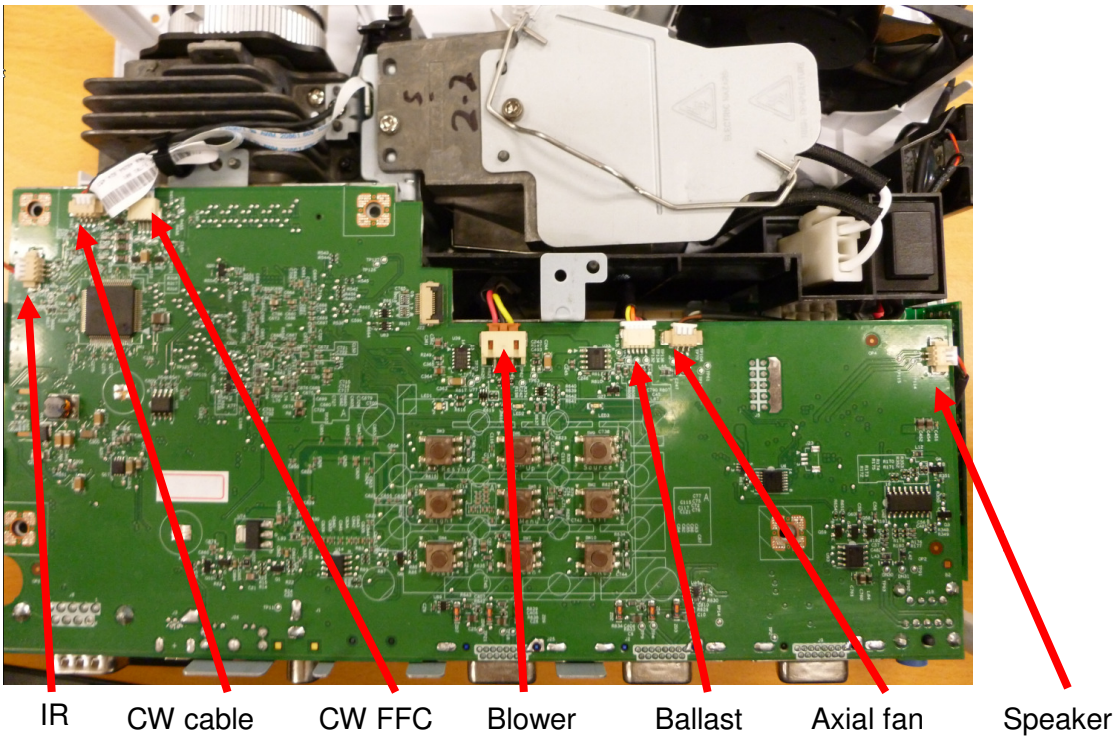

- **For H6510BD :**

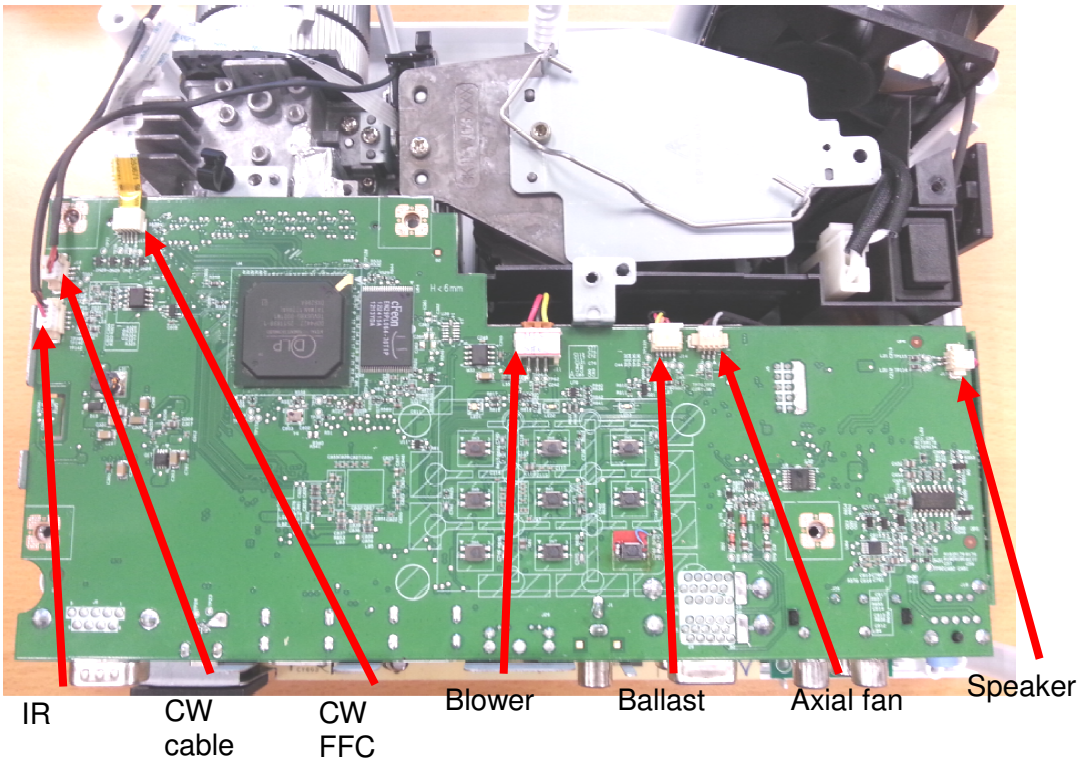

MB Shielding assembly:

- **For X1140A/X1240/X1140:**

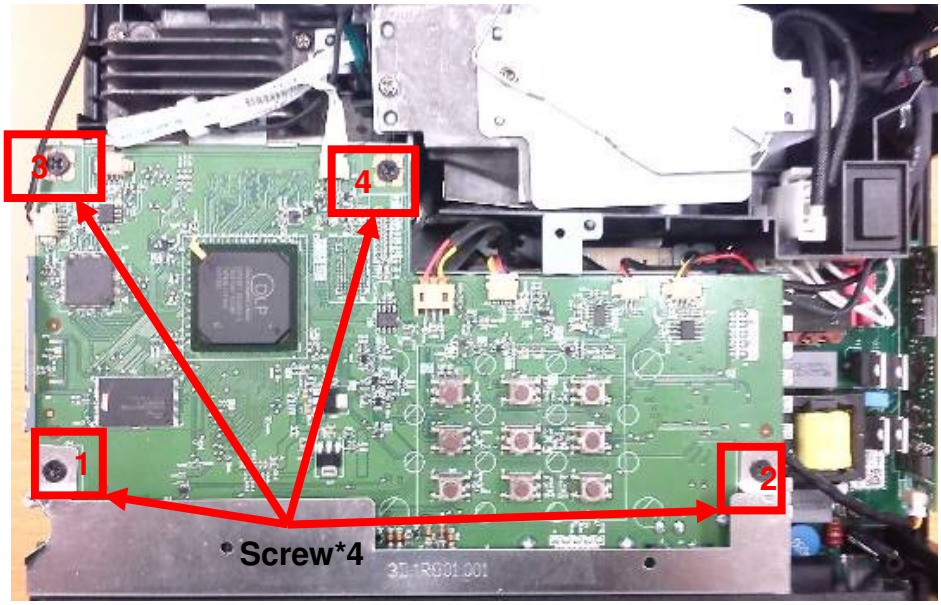

- **For P1340W/X1340WH/H6510BD :**

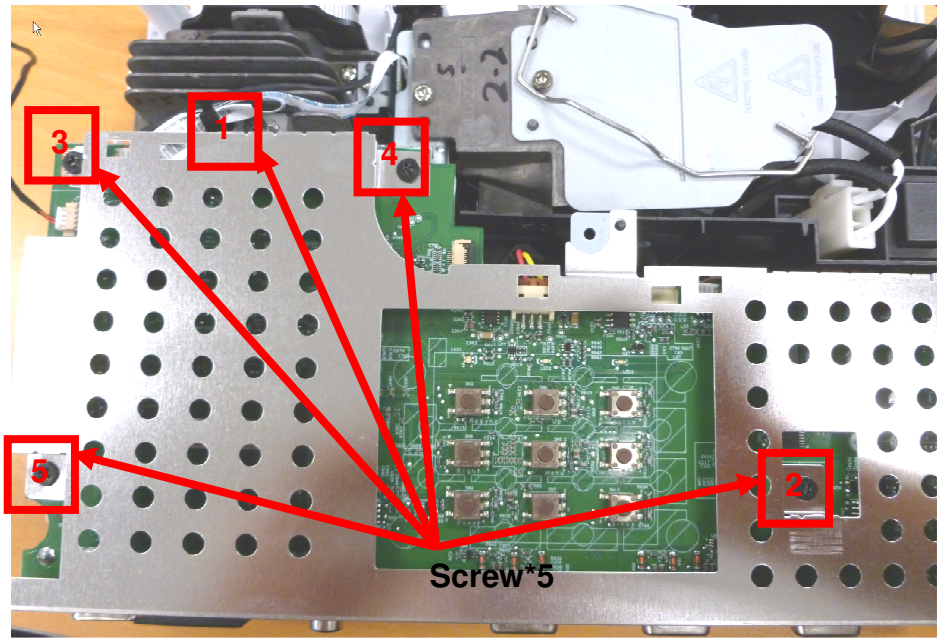

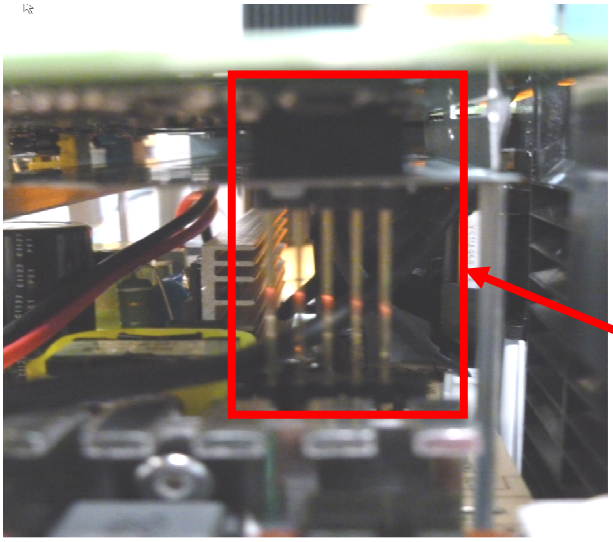

Notice Pins position, and plug accurately

Cable routing for CW cable:

- **For X1140A/X1240/X1140/P1340W/X1340WH :**

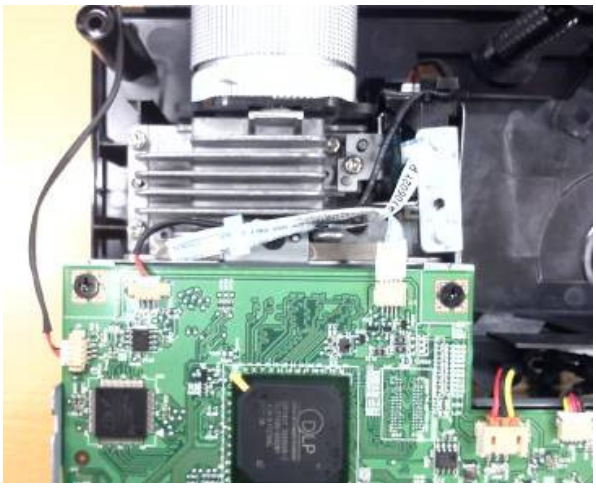

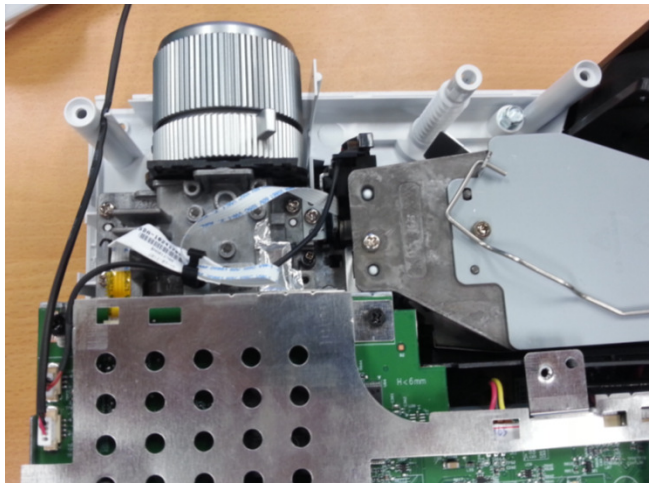

10. Assemble rear case

- **For X1140A/X1240:**

- **For X1140:**

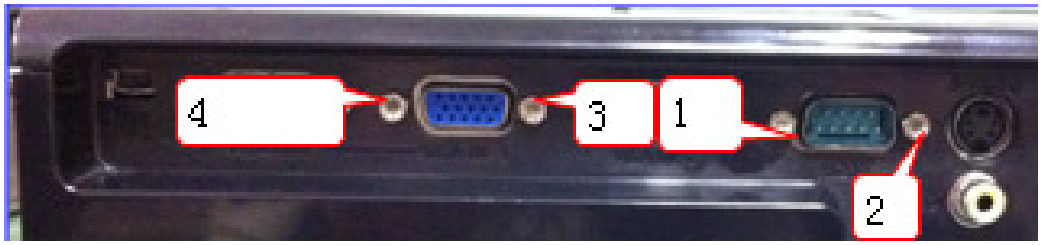

- **For P1340W/X1340WH:**

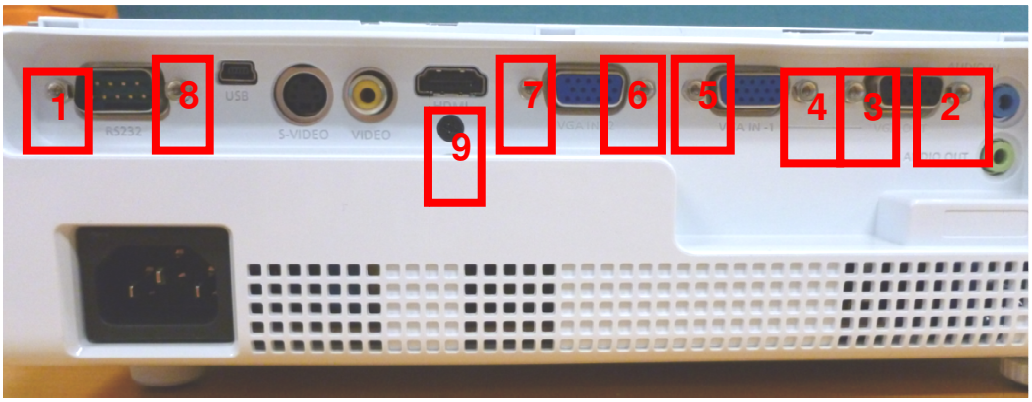

- **For H6510BD:**

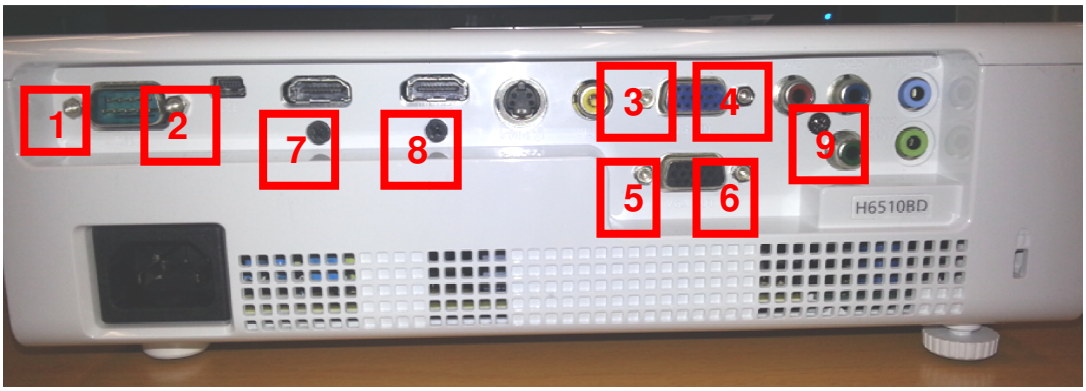

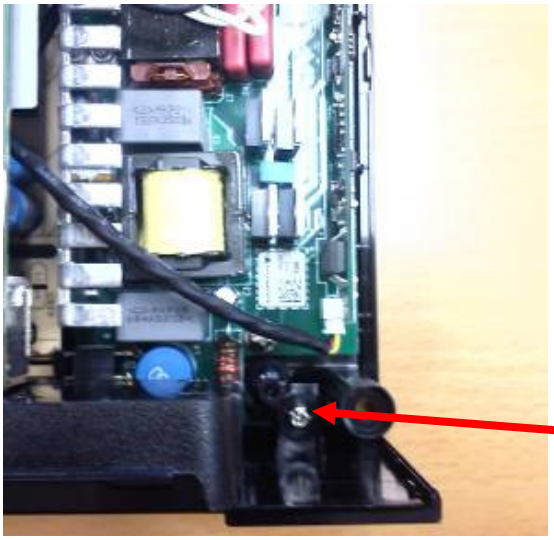

11. Assemble front case pre-assy

a. Pre-Assemble IR BD into front cover

b. Pre-Assemble screw into front cover

Plug IR cable

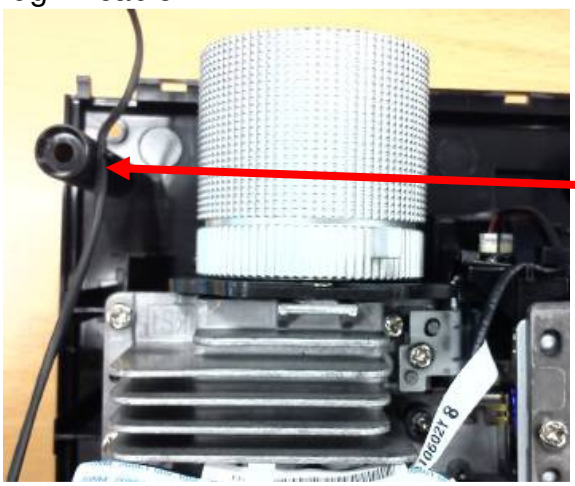

12. Assemble upper case

(1) Sub upper case--Assemble keypad :

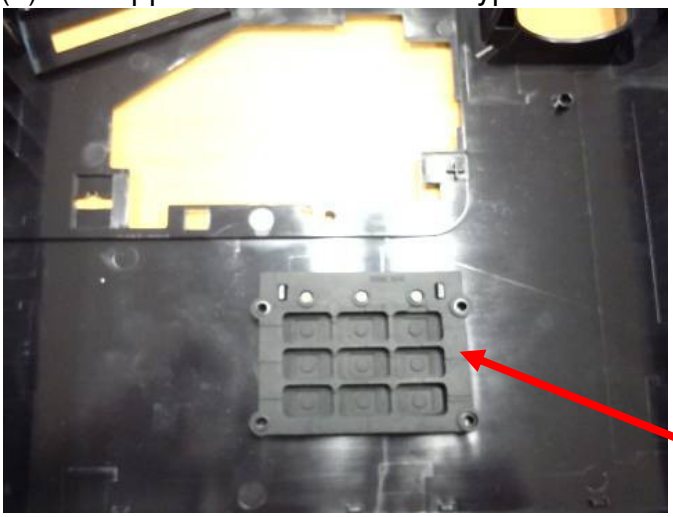

(2) Assemble film anti-explode on upper case

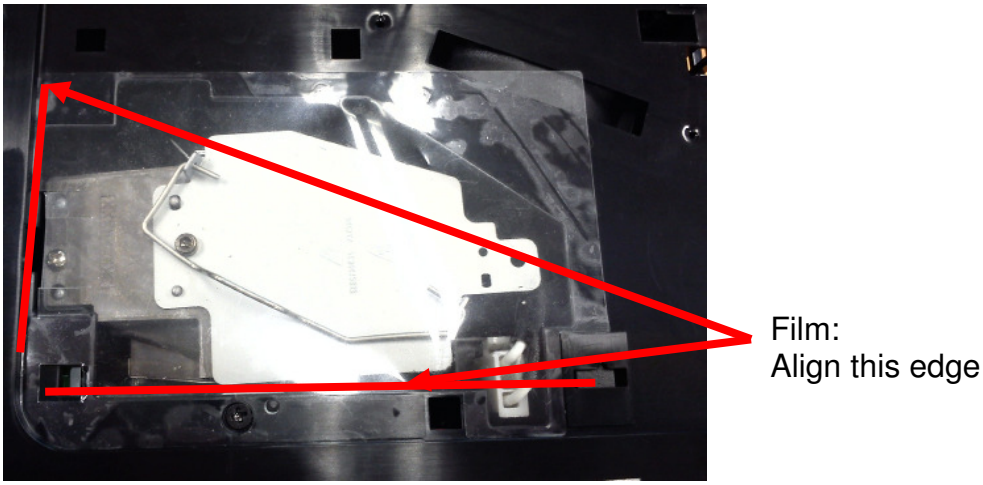

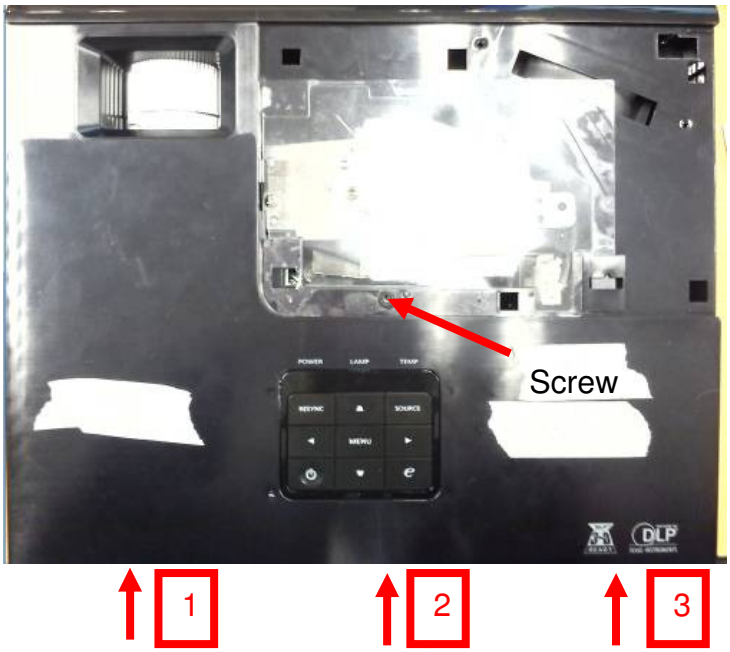

13. Assemble front case

- **For X1140A/X1240/X1140:**

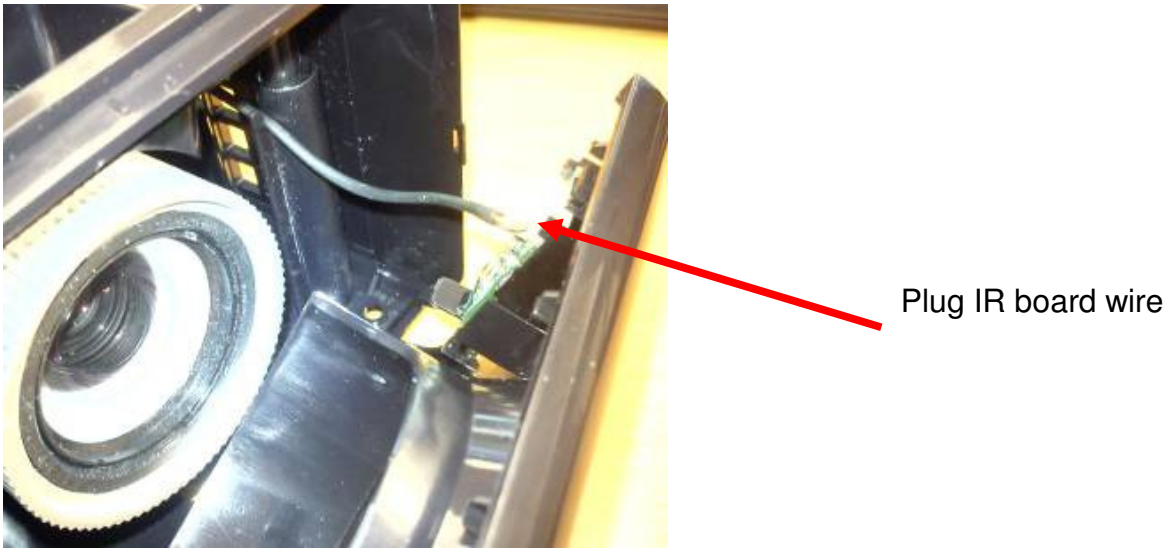

- **For P1340W/X1340WH/H6510BD:**

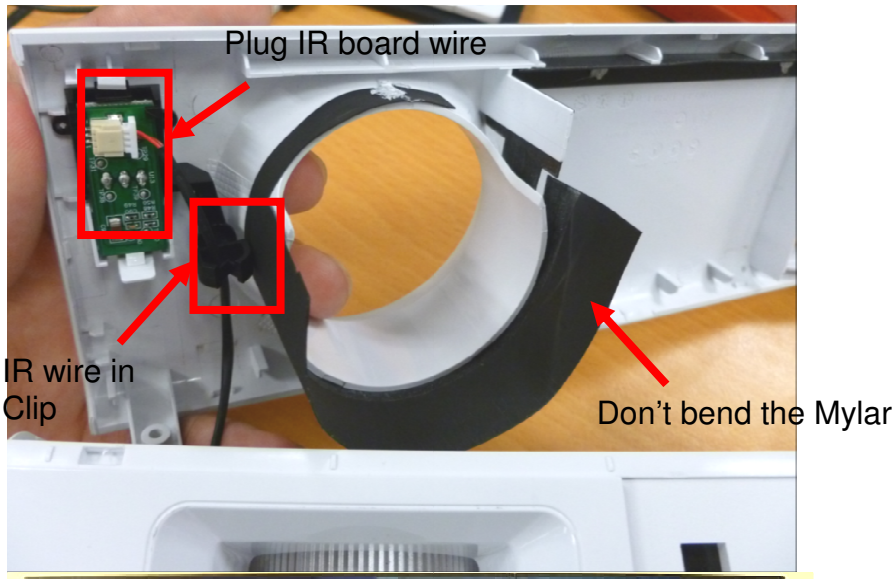

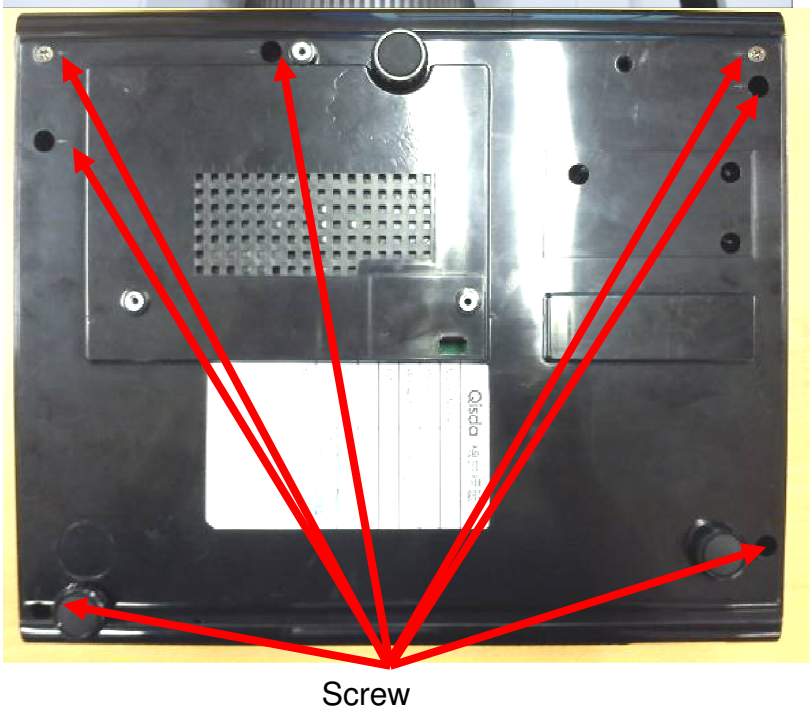

14. Assemble lamp door

Assemble by this direction

System Analysis

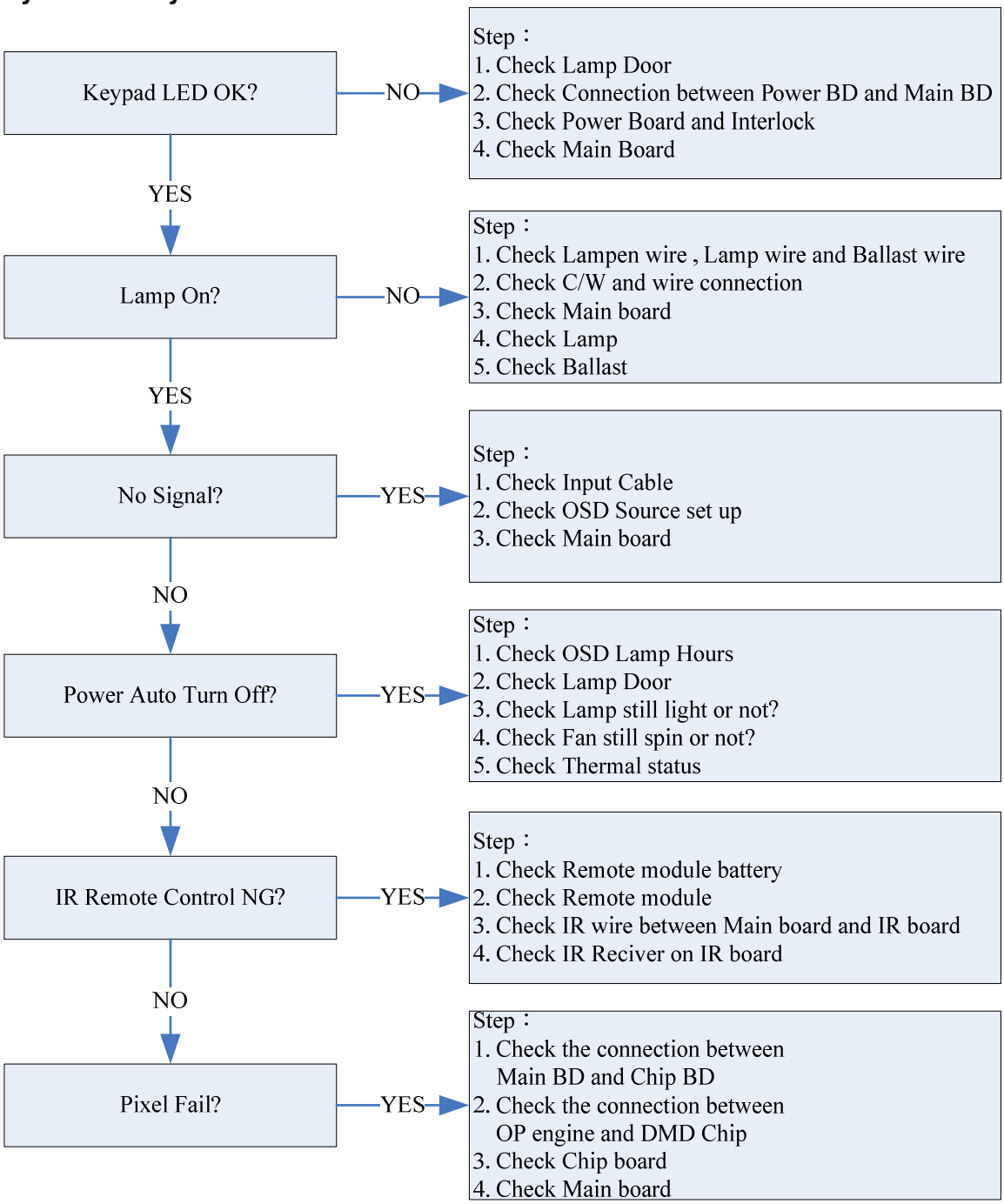

Optical Problems Checking Items

No.	Item	Trouble Shooting Guide
1	Brightness	1. Change lamp
2	Uniformity	1. Change lamp
3	FOFO Contrast	1. Check ADC calibration 2. Check user's menu brightness & contrast are default 3. Clean DMD 4. Clean PL 5. Check ILL stop assy
4	ANSI Contrast	1. Clean PL 2. Clean DMD 3. Change PL
5	Color	1. Check color wheel delay 2. Check CW 50% point. Replace CW if necessary
6	Color Uniformity	1. Change lamp
7	Blue Edge	1. Refer to next "Blue Edge" Trouble Shooting section 2. Change CM 3. Change SUB HSG
8	Blue/Purple Border	1. Refer to next page 2. Change CM 3. Change SUB HSG
9	Focus	1. Change Projection Lens 2. Check PL datum and DMD parallel
10	Dust	Clean DMD
11	Horizontal/Vertical Strips	1. Check connector between chip BD and Main BD 2. Re-install DMD with chip BD 3. Check if any pin of C-Spring is missing, damaged or dirty 4. Change new Chip BD/C-Spring 5. Change new DMD
12	Pixel Fail	Change new DMD (Refer to next "DMD Image Quality" section)

- **“Blue Edge” Trouble Shooting:**

1. Re-adjust “Overfill” first.
   For Overfill Re-adjustment:
   i. Those 2 Adjustment Screws must be released for around 2 mm first.
   ii. Alignment Sequence:
      a. To adjust “Horizontal Adjustment Screw” firstly, then “Vertical Adjustment Screw”.
      b. Refer to below Figure.

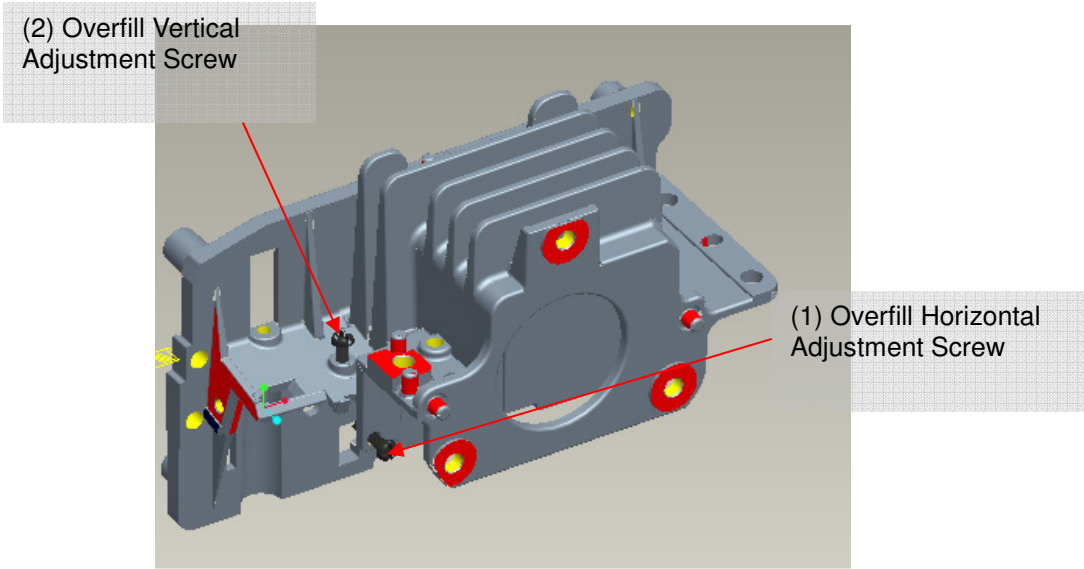

2. Re-assemble LP module—include LP, LP Baffle, LP clip.

- **DMD Image Quality**

1. SCOPE
   This document specifies the image quality requirements applicable to the DLP®.55SVGA Type X and Series 450 Value Component Set, and DLP™.65WXGA-800 Value Component Set. The Component Set provides the digital imaging functionality based on Digital Micromirror Device (DMD) technology.

2. Definitions
   Blemish
   A blemish is an obstruction, reflection, or refraction of light that is visible, but out of focus in the projected image under specified conditions of inspection(see Table 1). It is caused by a particle, scratch, or other artifact located in the image illumination path.

   Dark pixel
   A single pixel or mirror that is stuck in the OFF position and is visibly darker than the surrounding pixels.

   Bright pixel
   A single pixel or mirror that is stuck in the ON position and is visibly brighter than the surrounding pixels.

   Unstable pixel
   A single pixel or mirror that does not operate in sequence with parameters loaded into memory. The unstable pixel appears to be flickering asynchronously with the image.

   Adjacent pixel
   Two or more stuck pixels sharing a common border or common point, also referred to as a cluster.

   Reset Boundary Artifact
   The reset boundary artifact is a single row of pixels on the reset group boundaries that are visibly darker or lighter than the neighboring rows of pixels.

   Pond of mirrors (POM)
   POM is a rectangular array of off-state mirrors surrounding the active area.

   Eyecatcher
   Eyecatcher's are blemishes appearing in the area outside of the Active Area. These are due to particles and various DMD window or window aperture “defects” including: digs, voids, and scratches.

   Border Artifacts
   Border artifacts are a general category of image artifacts that may show up on screen in the area outside of the active array. Border artifacts include: Exposed Bond Wires, Exposed Metal 2, and Reflective Edge.

   Bond Wires
   Bond Wires are the electrical connections between the die and the DMD ceramic package. If visible, they will appear as short light parallel lines outside of the Pond of Mirrors (POM).

Exposed Metal 2
Exposed Metal 2 is due to a shift in positioning of either the die or the window aperture, which may allow light to be reflected off of the layer of metal 2 that is below the super structure (mirrors). This defect is located outside of the POM.

Reflective Edge
Reflective Edge is light that may reflect from the edge of the DMD window aperture onto the projection screen. It will appear as a thin diffuse line outside of the POM.

Blue 60 Screen
The Blue 60 screen is used to test for major dark blemishes. All areas of the screen are colored a Microsoft Paintbrush blue 60 (green and red set at 0, blue set at 60).
NOTE: If linear degamma is not used then the Microsoft Paintbrush values must be adjusted to match the degamma table being used in order to generate an equivalent blue level on the test screen image.

Gray 10 Screen
The Gray 10 screen is used to test for major light blemishes. All areas of the screen are colored a Microsoft Paintbrush gray 10 (green, red, and blue set at 10).
NOTE: If linear degamma is not used then the Microsoft Paintbrush values must be adjusted to match the degamma table being used in order to generate an equivalent gray level on the test screen image.

Gray 30 Screen
The Gray 30 screen is used to test for the reset boundary artifact. All areas of the screen are colored a Microsoft Paintbrush gray 30 (green, red, and blue set at 30).
NOTE: If linear degamma is not used then the Microsoft Paintbrush values must be adjusted to match the degamma table being used in order to generate an equivalent gray level on the test screen image.

3. ACCEPTANCE REQUIREMENTS

Conditions of Acceptance

All DMD image quality defects must be determined under the following projected image test conditions:

a. Test Set degamma shall be linear.
b. Test Set brightness and contrast settings shall be set to nominal.
c. The diagonal size of the projected image shall be a minimum of 60 inches.
d. The projection screen shall be 1X gain.
e. The projected image shall be inspected from an 8 feet minimum viewing distance.
f. The image shall be in focus during all Table 1 tests.

Test Sequence
Tests shall be run in the sequence listed in Table 1~2.

TABLE 1.Image Quality Specification **(for X1140A/X1240/X1140)**

SEQ #	TEST	SCREEN	ACCEPTANCE CRITERIA
1	Major Dark Blemish	Blue 60	1. ≦4 visible dark blemishes are allowed in the active area 2. No blemish will be > 1.5” long/diameter
2	Major Light Blemish	Gray 10	1. ≦4 visible light blemishes are allowed in the active area 2. No blemish will be > 1.5” long/diameter
3	Reset Boundary Artifact	Gray 30	1. No reset boundary artifacts allowed
4	Eyecatchers Border Artifacts	Any screen	1. Eyecatcher and border artifacts are allowed
5	Projected Images	Any screen	1. No adjacent pixels 2. No bright pixels in Active Area 3. No unstable pixels in Active Area 4. ≦1 bright pixel in the POM 5. ≦4 dark pixels in the Active Area 6. No DMD window aperture shadowing on the Active Area 7. Minor blemishes are allowed

TABLE 2.Image Quality Specification **(for P1340W/X1340WH)**

SEQ #	TEST	SCREEN	ACCEPTANCE CRITERIA
1	Major Dark Blemish	Blue 60	1. ≦4 visible dark blemishes are allowed in the active area 2. No blemish will be > 1” long/diameter
2	Major Light Blemish	Gray 10	1. ≦4 visible light blemishes are allowed in the active area 2. No blemish will be > 1” long/diameter
3	Reset Boundary Artifact	Gray 30	1. No reset boundary artifacts allowed
4	Eyecatchers Border Artifacts	Any screen	1. Eyecatcher and border artifacts are allowed
5	Projected Images	1. Any screen 2. Gray 10 3. Any screen 4. Gray 10 5. Whit 6. Any screen 7. Any screen	1. No adjacent pixels 2. No bright pixels in Active Area 3. No unstable pixels in Active Area 4. ≦1 bright pixel in the POM 5. ≦7 dark pixels in the Active Area 6. No DMD window aperture shadowing on the Active Area 7. Minor blemishes are allowed

TABLE 3.Image Quality Specification **(for H6510BD)**

SEQ#	Test	SCREEN	ACCEPTANCE CRITERIA
1	Major Dark Blemish	Two Zone Blue 60	1. ≦4 visible dark blemishes are allowed in the active area 2. No blemish will be ＞1.5” long/diameter
2	Major Light Blemish	Two Zone Gray 10	1. ≦4 visible dark blemishes are allowed in the active area 2. No blemish will be ＞1.5” long/diameter
3	Non-Active Area Artifacts / Border Defects	Any Screen	1. Non-Active Area Artifacts are acceptable 2. Border Defects are acceptable
4	Reset Boundary Artifact	Any Screen	Reset boundary artifacts are acceptable
5	Minor Blemishes	Any screen	1. ≦8 total minor blemishes allowed 2. No blemished shall be >5 inches long/diameter
6	Projected Images	1. Any screen 2. Gray 10 3. Any screen 4. Gray 10 5. White	1. No adjacent pixels 2. No bright pixels in Active Area 3. No unstable Pixels in Active Area 4. ≦ 1 right pixel in the POM 5. 0 dark pixels in Zone A and ≦2 in Zone B

Notes:

1. Projected blemish numbers include the count for the shadow of the window artifact in addition to the artifact itself.
2. During all Table 1 tests, projected images shall be inspected in accordance with the conditions of inspection specified in Section 3.
3. The rejection basis for all cosmetic DMD defects (scratches, nicks, particles) will be the projected image tests referenced in Table 1.
4. Devices that meet this image quality specification but are deemed undesirable by the customer may not be returned to TI without prior approval by TI.
5. Screens < Gray10 shall not be used as a basis for rejecting a DMD for image quality.

Power Supply Problems Checking Flow

1. Introduction

This document is prepared to be a guide to repair trouble sets, some problems happen more frequently are taken as example in it.

2. Problems

(a) No power

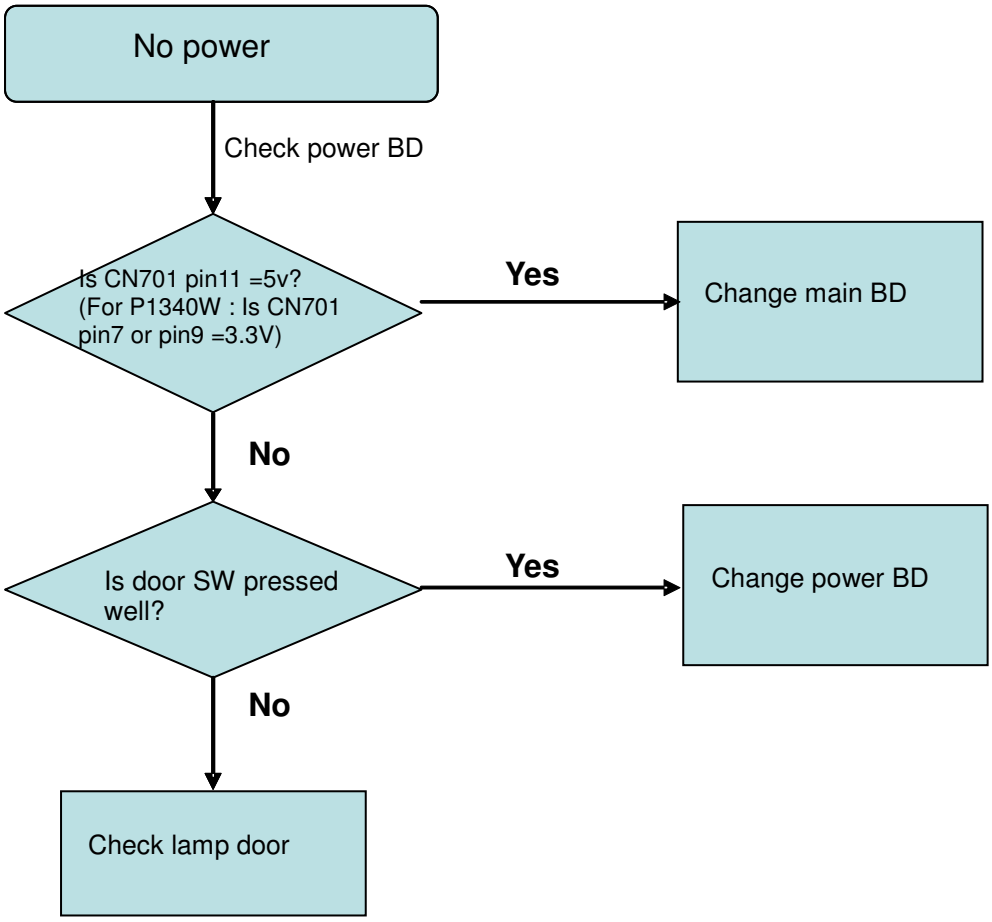

(b)Lamp cannot be turned on

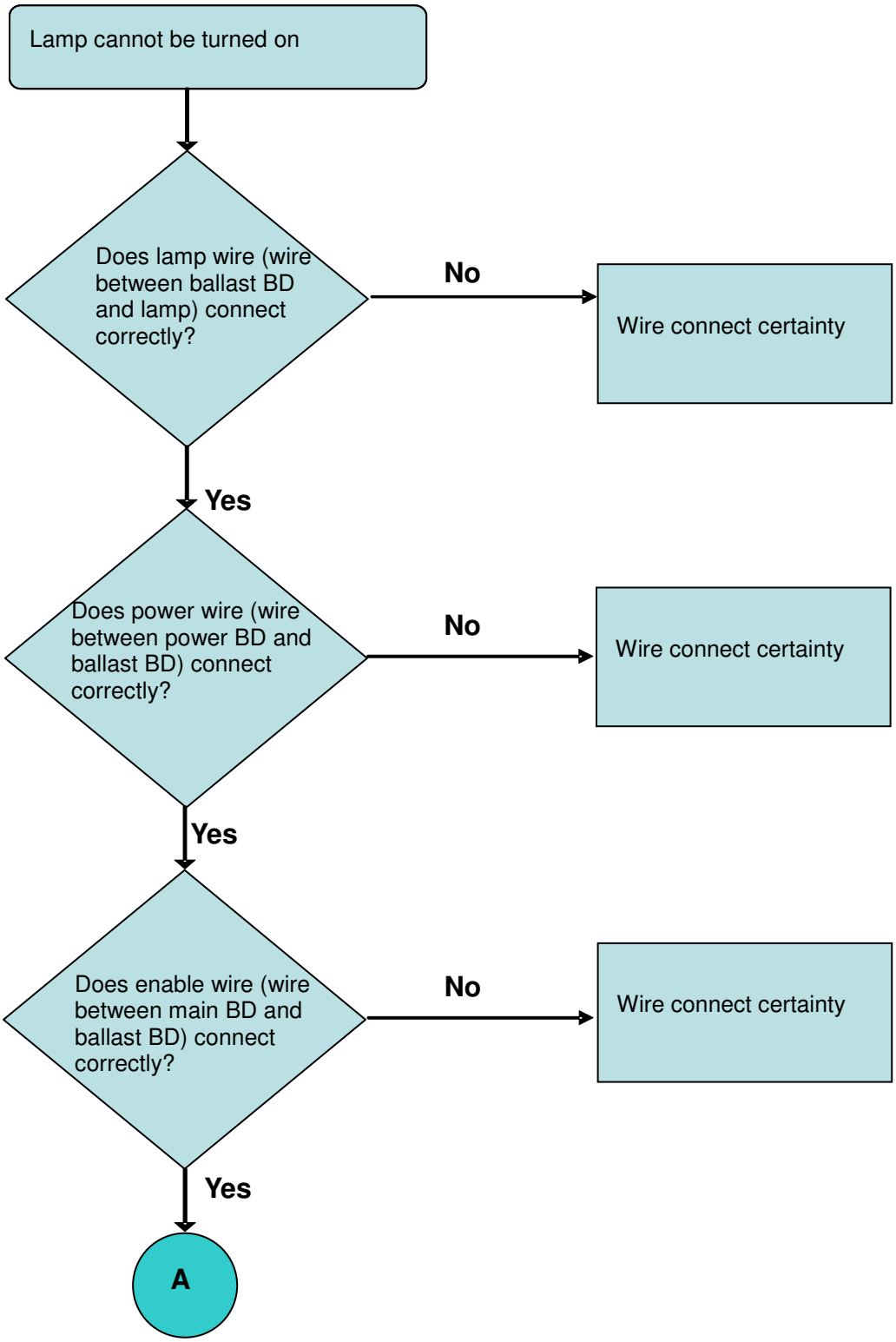

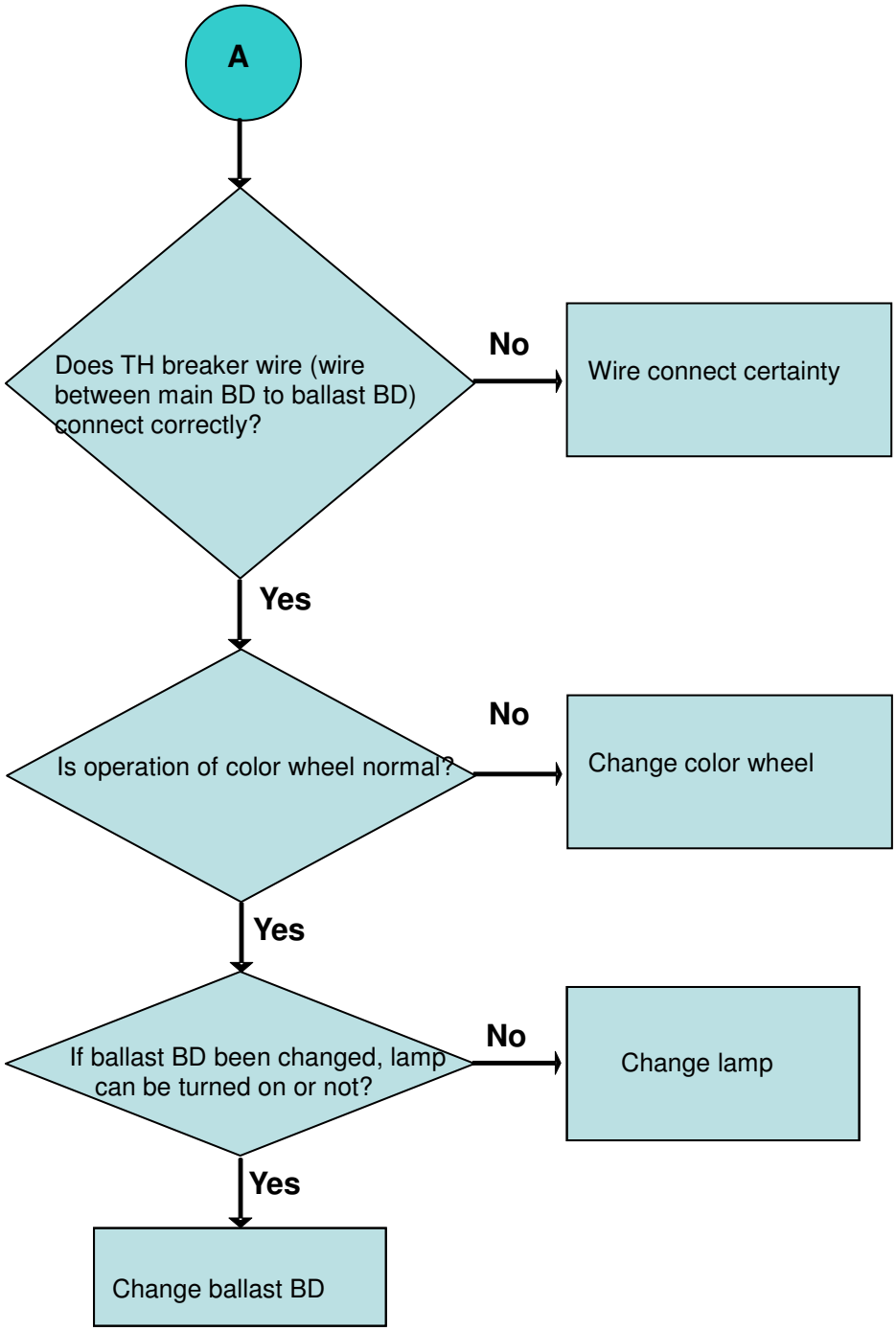
A
Does TH breaker wire (wire between main BD to ballast BD) connect correctly?
No
Wire connect certainty
Yes
Is operation of color wheel normal?
No
Change color wheel
Yes
If ballast BD been changed, lamp can be turned on or not?
No
Change lamp
Yes
Change ballast BD

LED Messages Definition

External Status indicator

LED Name	Detailed Description
Power LED	Display the power on/off sequence status
Lamp Status LED	Display the Lamp status (Lamp fail, Lamp spoil etc.)
Temperature Status LED	Display the Thermal status (Fan Fail, Over Temperature, etc.)

	Power_LED	Power_LED	Lamp_LED	Temp_LED
	BLUE	RED	RED	RED
Power Plug	- -	Flash ON to OFF	Flash ON to OFF	Flash ON to OFF
Standby	--	ON	--	--
Power button ON	ON	--	--	--
Lamp retry	0.5 second H(On), 0.5 second L(Off) flashing	--	--	--
Cooling state	--	0.5 second H(ON), 0.5 second L(OFF) flashing	--	--
Power button OFF: Cooling completed; Standby Mode	--	ON	--	--
Firmware Download	--	ON	ON	ON--
Thermal sensor error. OSD shows "Projector Overheated"	ON	--	--	ON
Fan lock error OSD shows red "Fan Fail, Will automatically turn off soon"	ON	--	--	0.5 second H(On), 0.5 second L(Off) flashing
Lamp error (Lamp, ballast)	ON	--	ON	--
Color Wheel fail	ON	--	0.5 second H(ON), 0.5 second L(OFF) flashing	--

Error Count Messages Definition

- **For X1140A/X1240/X1140:**

Error Count	Definition	Specification
LAMP Fail error	LAMP OFF	DETECT LAMPLIT
FAN 1 Speed Error	LAMP FAN SPEED ERROR	SPEED OVER ± 20%
FAN 2 Speed Error	BLOWER FAN SPEED ERROR	SPEED OVER ± 20%
Sensor 1 Open Error	Main Board SENSOR ERROR	DETECT Sensor 1
Sensor 1 Short Error	Main Board SENSOR ERROR	DETECT Sensor 1
Temperature 1 Error	over limited temperature	DETECT Sensor 1
FANIC 1 I2C ERROR	I2C communication error	DETECT Fan IC

Note: Fan and Sensor placement refers below figure:

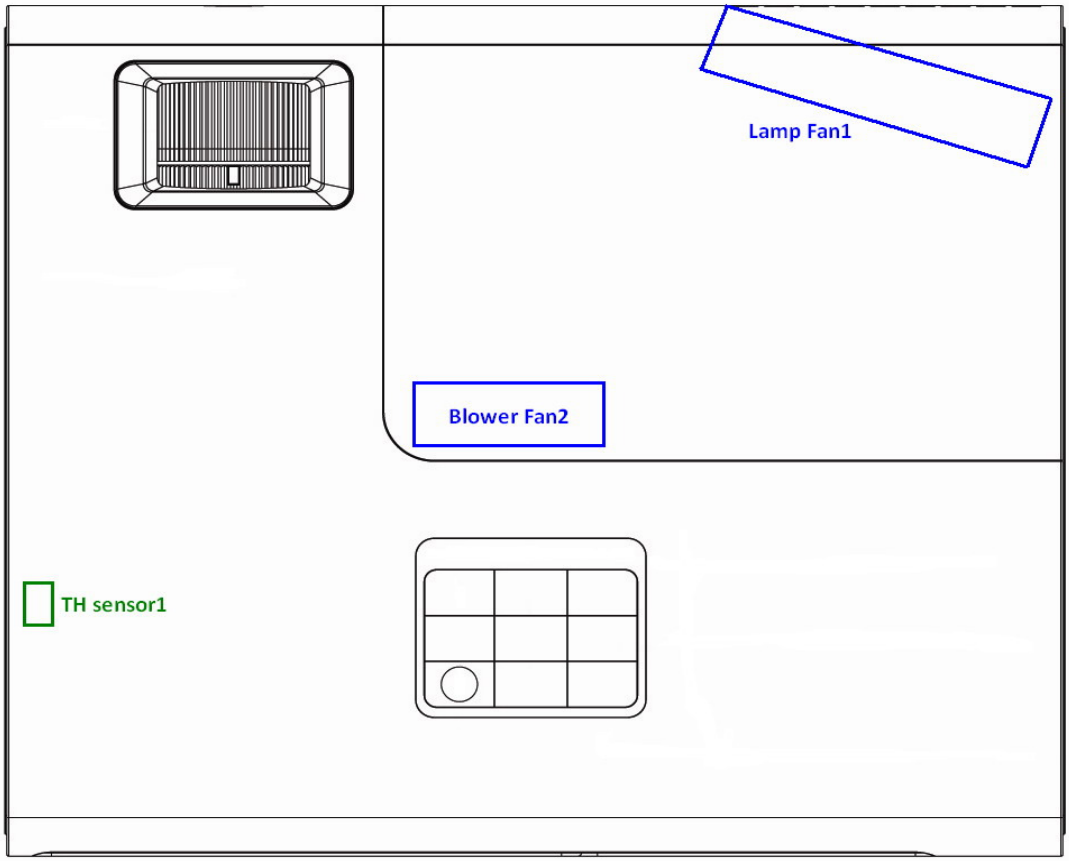

- **For P1340W/X1340WH/H6510BD:**

Error Count	Definition	Specification
LAMP Fail error	LAMP OFF	DETECT LAMPLIT
FAN 1 Speed Error	BLOWER FAN SPEED ERROR	SPEED OVER ± 20%
FAN 2 Speed Error	LAMP FAN SPEED ERROR	SPEED OVER ± 20%
Sensor 1 Open Error	Main Board SENSOR ERROR	DETECT Sensor 1
Sensor 1 Short Error	Main Board SENSOR ERROR	DETECT Sensor 1
Temperature 1 Error	over limited temperature	DETECT Sensor 1
FANIC 1 I2C ERROR	I2C communication error	DETECT Fan IC

Note: Fan and Sensor placement refers below figure:

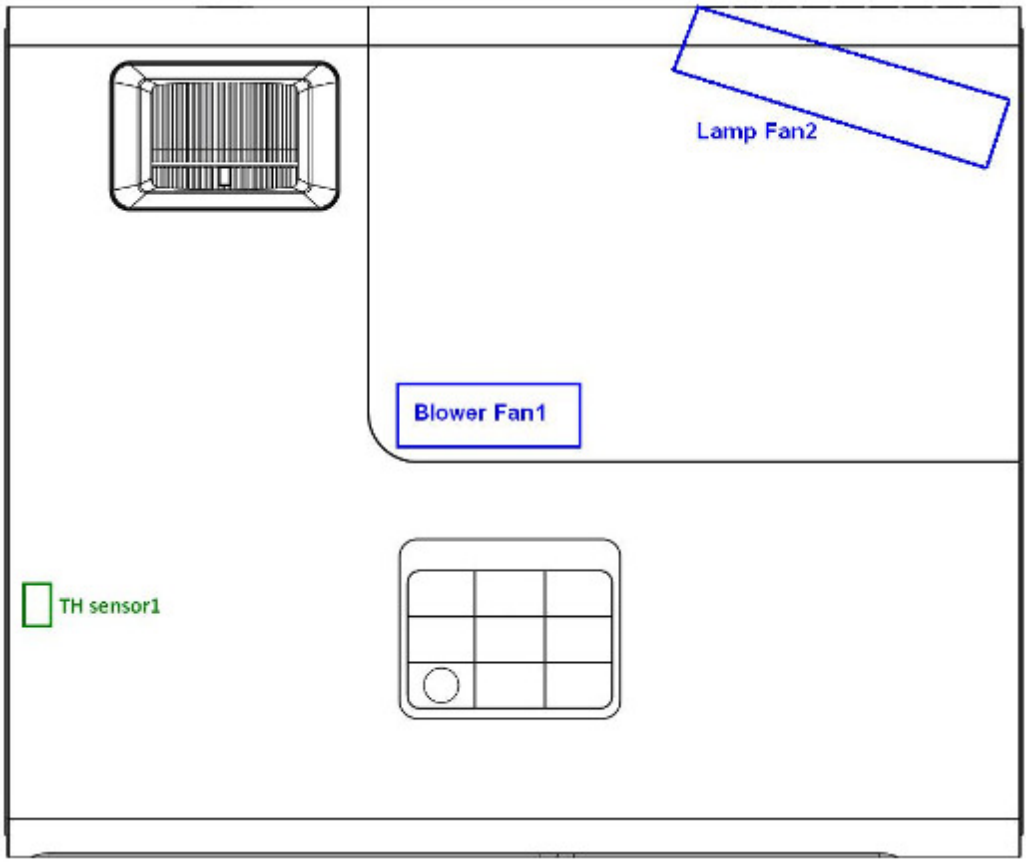

RS232 Connection

1. Connection:

The illustration of connection between PC and Projector is shown below.

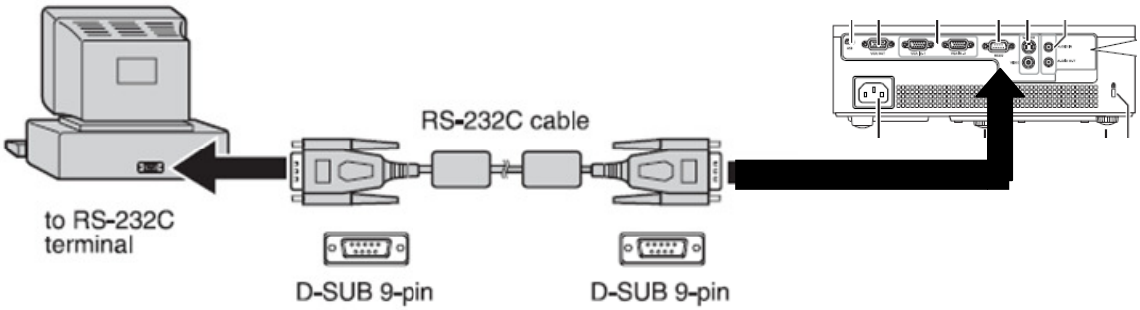

<CAUTION>

- Make sure that your computer and projector are turned off before connection.
- Power on the computer first, and then plug the power cord of the projector. (It may cause Com port incorrect function, if you do not follow this instruction)
- Adapters may be necessary depending on the PC connected to this projector. Please contact with your dealer for further details.

2. Hardware connection

<Download cable 1>

Standard RS232 Download cable (SPEC as below), D-sub 9-pin Female for Both terminals

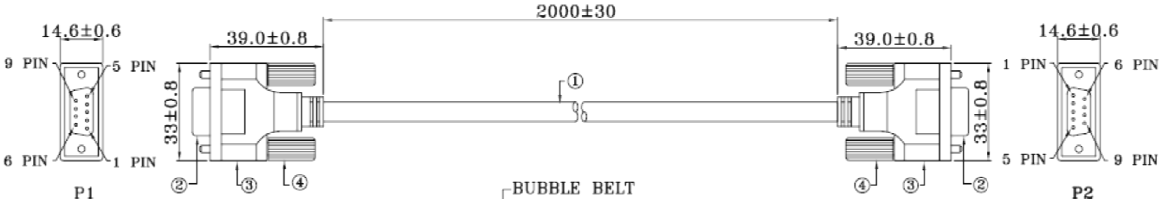

1	BLACK	1
2	BROWN	3
3	RED	2
4	ORANGE	4
5	YELLOW	5
6	GREEN	6
7	BLUE	8
8	PURPLE	7
9	GRAY	9
CASE	DRAIN WIRE	CASE

<Pin assignment for this two end>

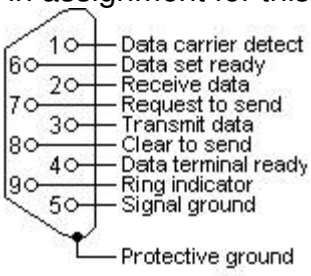

Pin	Definition	Pin	Definition
1	NC	2	RX
3	TX	4	NC
5	GND	6	NC
7	RTSZ	8	CTSZ
9	NC		

Interface Settings

RS-232 protocol	
Baud Rate	9600 bps
Data Length	8 bit
Parity Check	None
Stop Bit	1 bit
Flow Control	None

Command Category

Refer to Appendix A

Adjustment / Alignment Procedure

Content:

1. Color Wheel Delay Alignment
2. Overfill adjustment
3. PC Alignment Procedure
4. Keystone Calibration

1. Color Wheel Delay Alignment

Procedure:

1. Enter Factory Mode
2. Enter Block 1
3. Change CW Delay by adjusting the following gray pattern to smooth

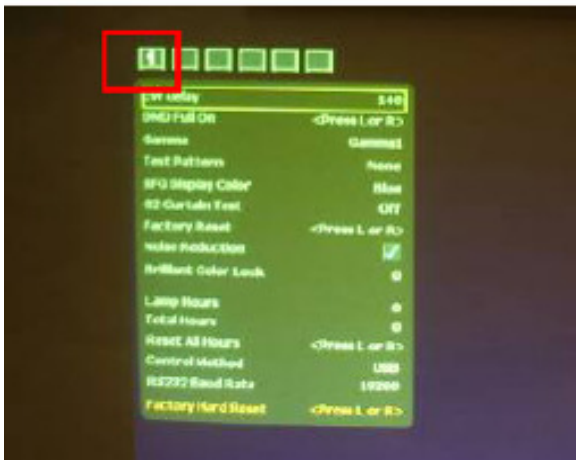

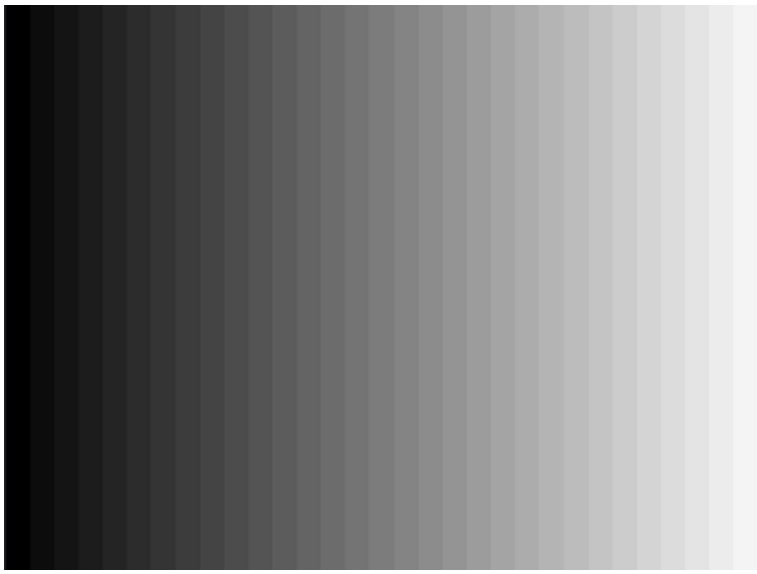

32 Gray pattern

2. Overfill adjustment (Blue Edge adjustment)

1. “Full White Pattern” is suggested for this alignment.
2. Adjust 2 LP-alignment Screws (upper side / lower front side of Optical Engine) behind Color Wheel.
3. Alignment Criteria is to adjust these 2 screws until “No Dark Edges” and “ No Shadows” can be observed in image.

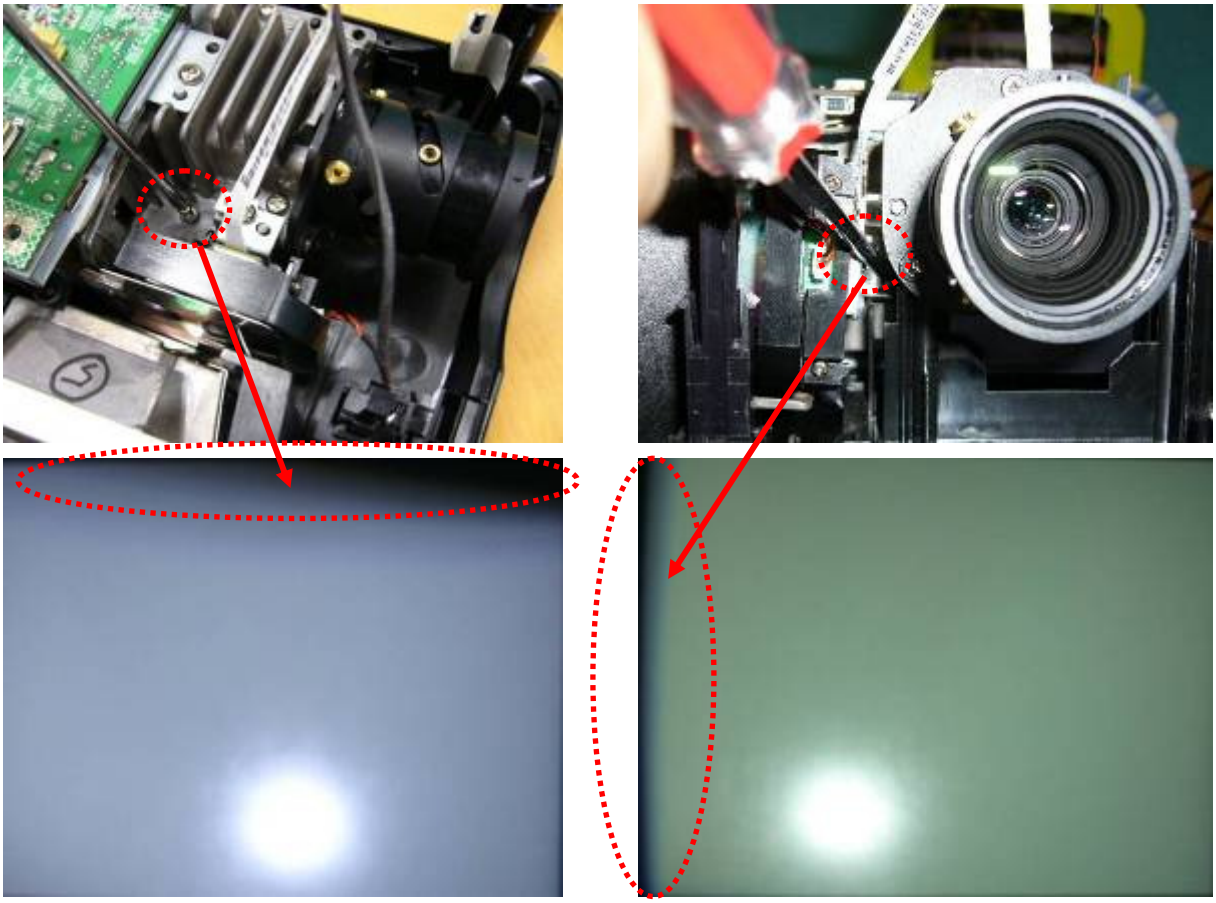

3. PC Alignment Procedure

Equipment：

- Pattern generator (Chroma-2327)

OSD Default value：

Item	Value
Cal R Offset	512
Cal G Offset	512
Cal B Offset	512
Cal R Gain	1024
Cal G Gain	1024
Cal B Gain	1024
YPbPr R Offset	512
YPbPr B Offset	512

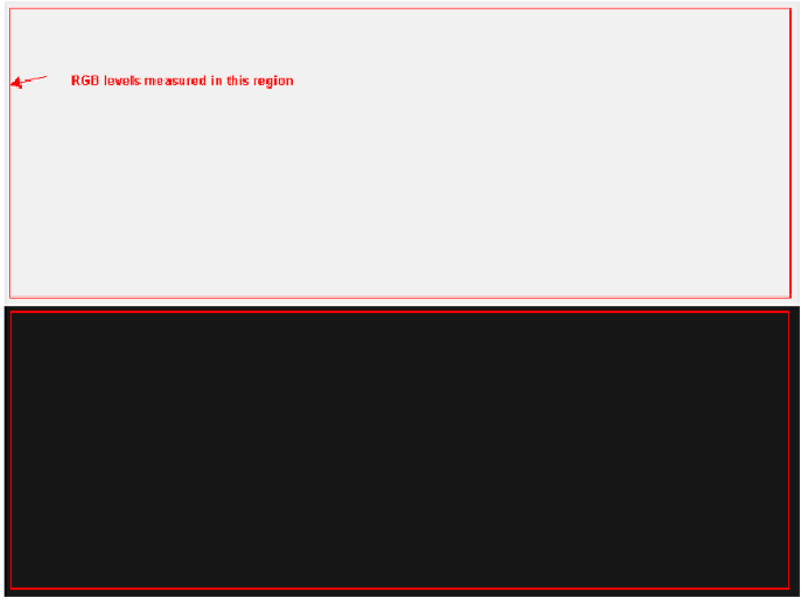

Pattern 1

Procedure：

1. Connect power, D-sub, into projector.
2. Change Timing and pattern of pattern generator:
3. Timing: 1024*768 @60Hz (XGA)
   1280*800 @60Hz (for H6510BD)
4. Pattern: As the figure below {A near white color (240,240,240) and a near black color(16,16,16)}
5. Light on projector
6. Set user OSD values to default.
7. Enter factory mode.
8. Set Factory values to default.
9. Press “Calibration RGB” to let the black level to just distinguish, and the light output of white level to just max.
10. Check the 32 levels of gray. All steps must appear.
11. Calibrate Dsub_1 only .(Dsub_2 follows Dsub_1)

4. Keystone Calibration (Only for X1140A/X1240/P1340W/X1340WH)

Condition：Horizontal plane(0°)

1. Make projector be horizontal
2. Enter factory menu
3. Enter into Block [3] in factory menu
4. Press “AutoKeystoneAngleCalEnable <Press L or R>” to enable this function.
5. Set the projector on the table adjust to 0 degree.
6. Select item “AutoKeystoneCal”
7. Press key Left or Right to do auto calibration
8. Finish 0° calibration and bellow items will show data:

   -5≤ AutoKeystoneXCal ≤43

   AutoKeystoneXOffset ≤ 20

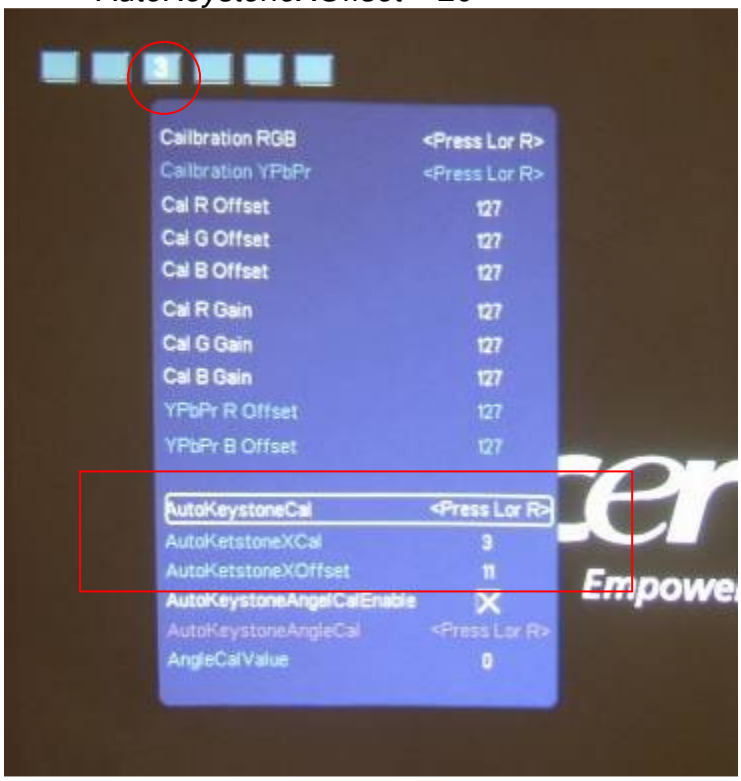

Chapter 5 FRU List

Exploded Diagram

Module 1 – Total Exploded View

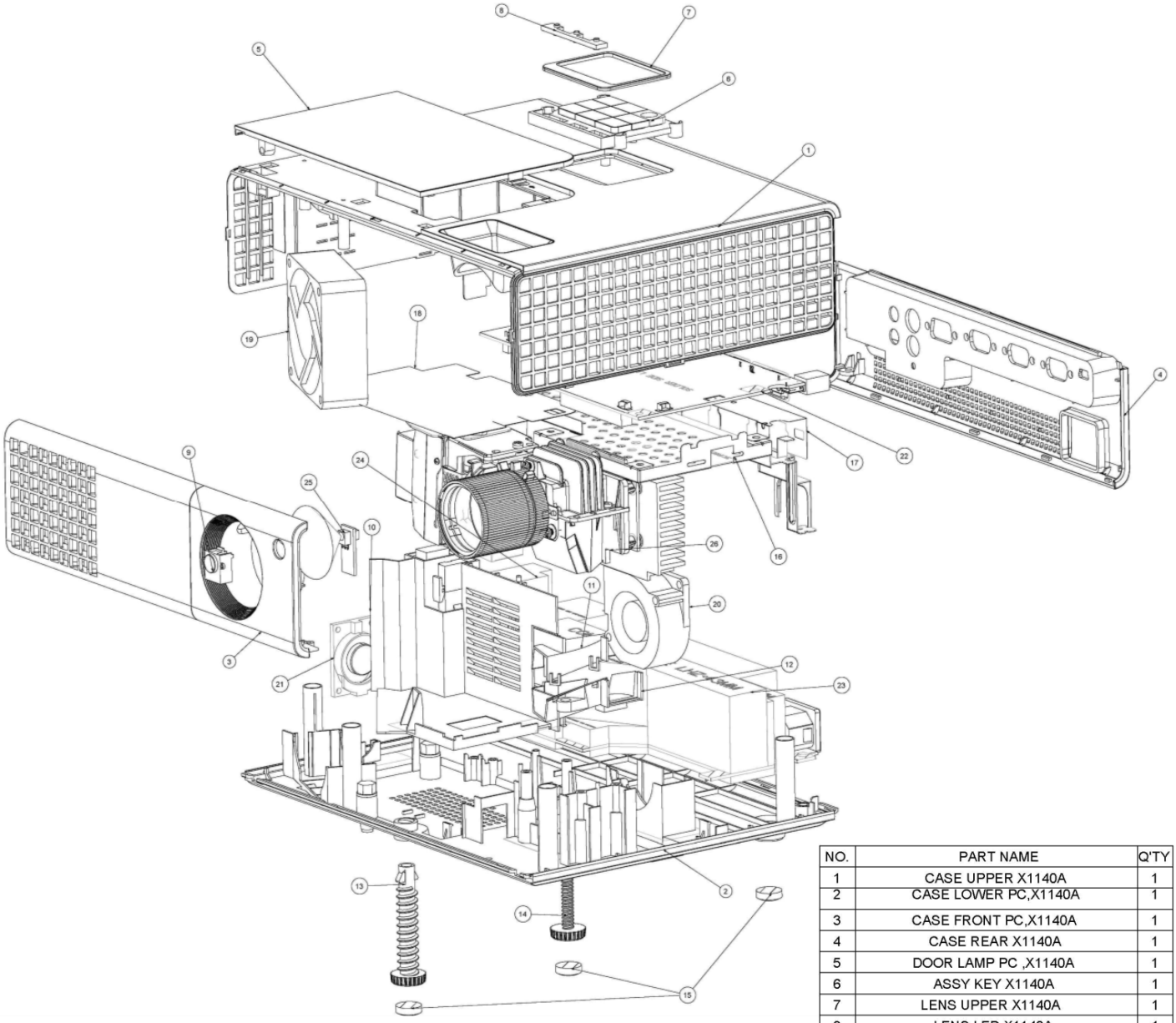

NO.	PART NAME	Q'TY
1	CASE UPPER X1140A	1
2	CASE LOWER PC,X1140A	1
3	CASE FRONT PC,X1140A	1
4	CASE REAR X1140A	1
5	DOOR LAMP PC ,X1140A	1
6	ASSY KEY X1140A	1
7	LENS UPPER X1140A	1
8	LENS LED X1140A	1
9	LENS IR X1140A	1
10	DOOR LAMP PC ,X1140A	1
11	NOZZLE TOP PPS X1111A	1
12	NOZZLE BOTTOM PPS X1111A	1
13	FOOT ADJUST FRONT	1
14	FOOT ADJUST REAR PC S1210	1
15	RUBBER FOOT PAD	3
16	BKT MAIN BD SECC	1
17	SHIELD MAIN BD SPTE	1
18	FILM LAMP EXPLODE X1140A	1
19	FAN 70*70*25 170MM AD07012DB	1
20	FAN 50*50*20 140MM AB5012DX	1
21	SPK 2W 8OHM 210MM	1
22	Main BD	1
23	Power BD	1
24	BALLAST 230W P-VIP SATURN10-2	1
25	PCBA IR BD MI MP522	1
26	ASSY OPT ENG Z2 SVGA X1140A	1

Module 2 – ASSY UPPER CASE

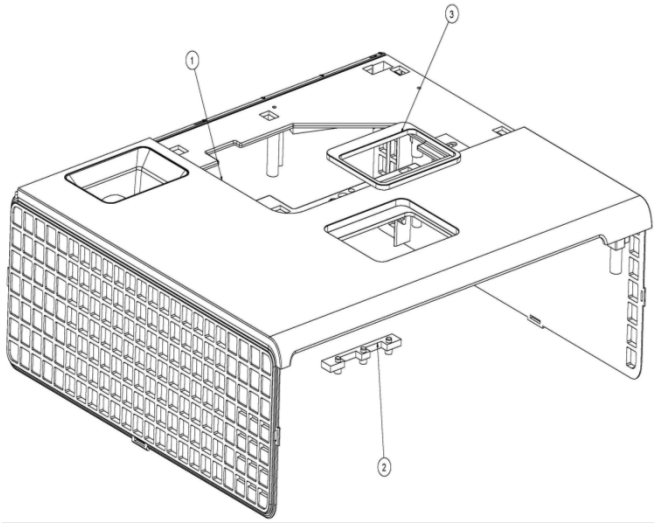

Module 3 – ASSY LOWER CASE

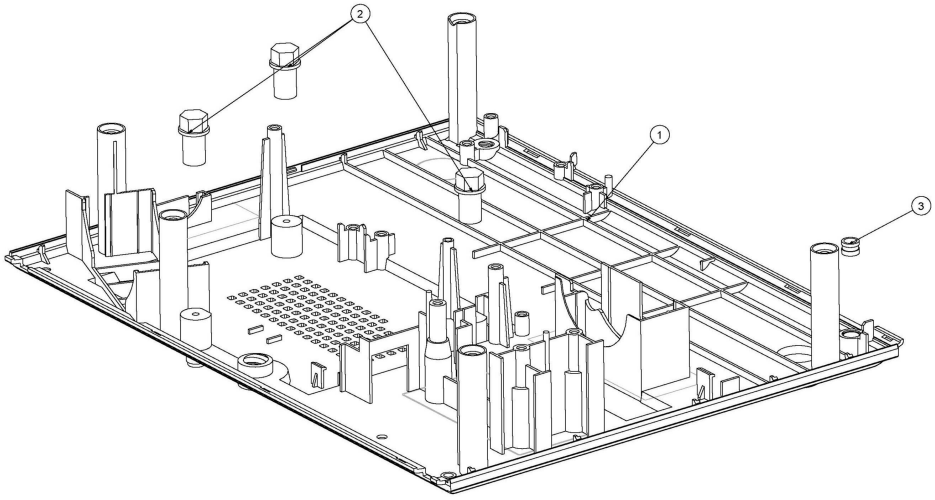

Module 4 – ASSY REAR CASE

For X1140A/X1240:

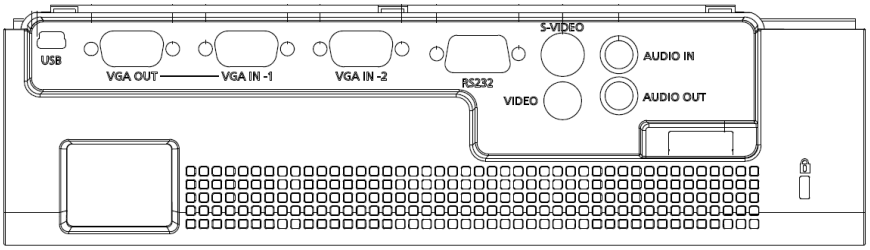

For X1140:

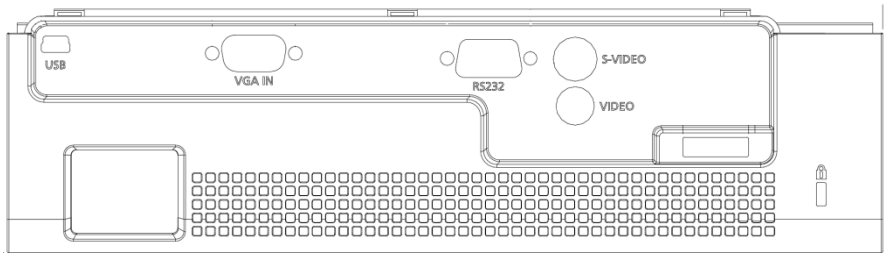

For P1340W/X1340WH:

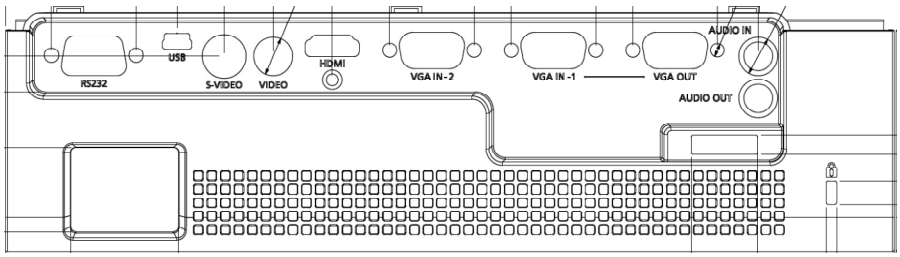

For H6510BD:

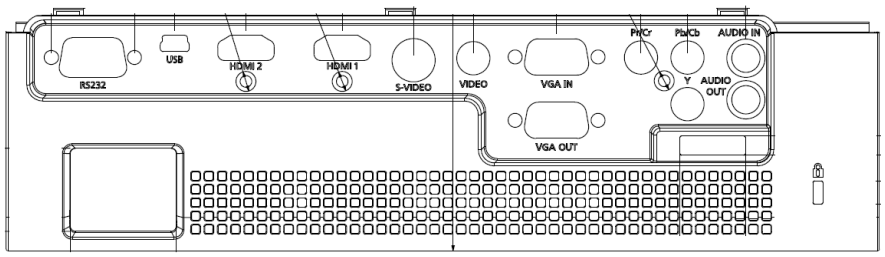

FRU List

Model	CATEGORY	PARTNAME	ACER PART NO.	Photo
X1140A X1240	REMOTE CONTROLLER	Projector Remote Control	VZ.JCQ00.001	
P1340W/X1340WH	REMOTE CONTROLLER	Projector Remote Control	VZ.JDW00.001	
X1140A	BOARD	MAIN BOARD	55.JERJ3.001	
X1240	BOARD	MAIN BOARD	55.JF2J3.001	
X1140	BOARD	MAIN BOARD	55.JFWJ3.001	
P1340W/X1340WH	BOARD	MAIN BOARD	55.JF4J3.001	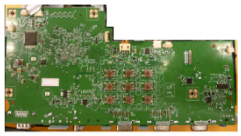
X1140A	BOARD	POWER BD	55.JERJ3.002	
X1240 X1140 P1340W/X1340WH	BOARD	POWER BD	55.JFWJ3.002	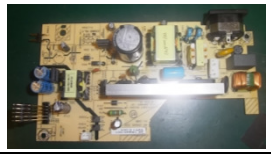
X1140A X1240 P1340W/X1340WH	BOARD	BALLAST BD	55.JERJ3.003	
X1140A X1240 P1340W/X1340WH	BOARD	DMD CHIP BOARD	55.JERJ3.004	
X1140A X1240 P1340W/X1340WH H6510BD	BOARD	IR SENSOR BOARD	55.J900Q.005	

X1140A X1240 P1340W/X1340WH H6510BD	CABLE	POWER CORD EU	27.LBJ0Q.001	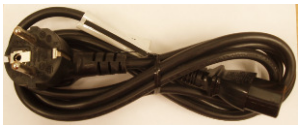
X1140A X1240 P1340W/X1340WH H6510BD	CABLE	D-SUB CABLE	50.J900Q.001	
X1140A X1240 X1140 P1340W/X1340WH	CABLE	CABLE - M/B TO IR BOARD	50.JFWJ3.001	
X1140A P1340W/X1340WH H6510BD	CABLE	CABLE - BALLAST TO LAMP	50.J900Q.004	
X1240	CABLE	CABLE - BALLAST TO LAMP	50.JF2J3.001	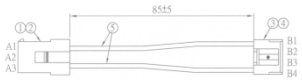
X1140A X1240 P1340W/X1340WH H6510BD	CABLE	CABLE - M/B TO BALLAST	50.K140Q.004	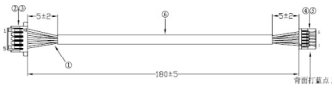
X1140A X1240 P1340W/X1340WH H6510BD	CABLE	CABLE - LAMP DOOR SWITCH	50.JERJ3.002	
H6510BD	CABLE	CABLE - THERMAL BREAK	50.JFZJ3.002	
X1140A X1240	CASE/COVER/BRACKET ASSEMBLY	REAR CASE	60.JERJ3.001	
X1140	CASE/COVER/BRACKET ASSEMBLY	REAR CASE	60.JFWJ3.001	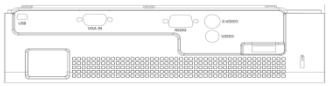
P1340W/X1340WH	CASE/COVER/BRACKET ASSEMBLY	REAR CASE	60.JF4J3.001	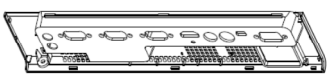

H6510BD	CASE/COVER/BRACKET ASSEMBLY	REAR CASE	60.JFZJ3.001	
X1140A X1240	CASE/COVER/BRACKET ASSEMBLY	UPPER CASE	60.JERJ3.002	
P1340W/X1340WH	CASE/COVER/BRACKET ASSEMBLY	UPPER CASE	60.JF4J3.002	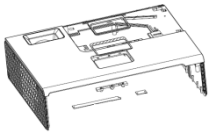
H6510BD	CASE/COVER/BRACKET ASSEMBLY	UPPER CASE	60.JFZJ3.002	
X1140A X1240	CASE/COVER/BRACKET ASSEMBLY	LOWER CASE	60.JERJ3.003	
P1340W/X1340WH	CASE/COVER/BRACKET ASSEMBLY	LOWER CASE	60.JF4J3.003	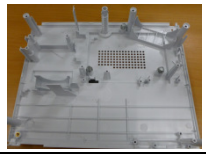
H6510BD	CASE/COVER/BRACKET ASSEMBLY	LOWER CASE	60.JFZJ3.003	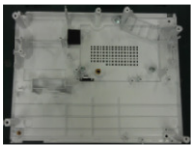
X1140A X1240	CASE/COVER/BRACKET ASSEMBLY	FRONT CASE	60.JERJ3.004	
P1340W/X1340WH	CASE/COVER/BRACKET ASSEMBLY	FRONT CASE	60.JF4J3.004	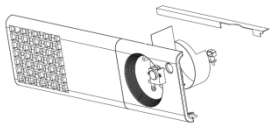
H6510BD	CASE/COVER/BRACKET ASSEMBLY	FRONT CASE	60.JFZJ3.004	
X1140A X1240	CASE/COVER/BRACKET ASSEMBLY	DOOR LAMP ASSY	60.JERJ3.005	
P1340W/X1340WH H6510BD	CASE/COVER/BRACKET ASSEMBLY	DOOR LAMP ASSY	60.JF4J3.005	

X1140A	CASE/COVER/BRACKET ASSEMBLY	FOCUS RING	60.JERJ3.006	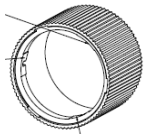
X1240 P1340W/X1340WH	CASE/COVER/BRACKET ASSEMBLY	FOCUS RING	60.J900Q.009	
H6510BD	CASE/COVER/BRACKET ASSEMBLY	FOCUS RING	60.JFZJ3.005	
X1140A X1240 P1340W/X1340WH	CASE/COVER/BRACKET ASSEMBLY	ZOOM RING	42.JBJ0Q.001	
H6510BD	CASE/COVER/BRACKET ASSEMBLY	ZOOM RING	60.K130Q.005	
X1140A X1240	CASE/COVER/BRACKET ASSEMBLY	KEYPAD	60.JERJ3.007	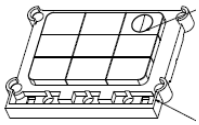
P1340W/X1340WH	CASE/COVER/BRACKET ASSEMBLY	KEYPAD	60.JF4J3.006	
H6510BD	CASE/COVER/BRACKET ASSEMBLY	KEYPAD	60.JFZJ3.006	
X1140A X1240	Lamp Module	Lamp Module for X1140A	MC.40111.001	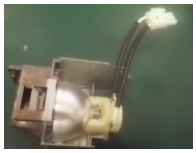
P1340W/X1340WH	Lamp Module	Lamp Module for P1340W	MC.40111.001	
H6510BD	Lamp Module	Lamp Module for H6510BD	MC.JFZ11.001	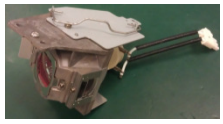
X1140A X1240	OPTICAL DEVICE	COLOR WHEEL MODULE	57.JERJ3.001	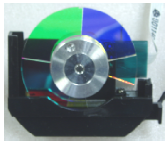

P1340W/X1340WH	OPTICAL DEVICE	COLOR WHEEL MODULE	57.JDP0Q.002	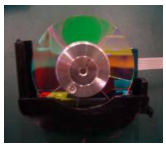
H6510BD	OPTICAL DEVICE	COLOR WHEEL MODULE	57.JFZJ3.001	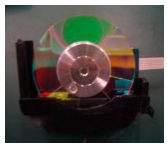
X1140A X1240	OPTICAL DEVICE	LIGHT PIPE	57.JERJ3.002	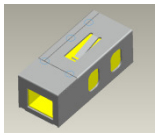
P1340W/X1340WH	OPTICAL DEVICE	COLOR WHEEL MODULE	57.JF4J3.001	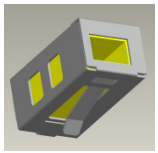
H6510BD	OPTICAL DEVICE	LIGHT PIPE	57.JFZJ3.002	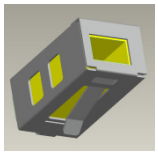
X1140A	OPTICAL DEVICE	LENS ZOOM	57.JERJ3.003	
X1240	OPTICAL DEVICE	LENS ZOOM	57.JCQ0Q.003	
P1340W/X1340WH	OPTICAL DEVICE	LENS ZOOM	57.JDP0Q.004	
H6510BD	OPTICAL DEVICE	LENS ZOOM	57.JFZJ3.003	
X1140A	OPTICAL DEVICE	DMD CHIP	57.JERJ3.004	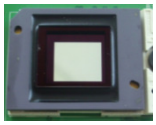
X1140A	OPTICAL DEVICE	DMD CHIP	57.JERJ3.005	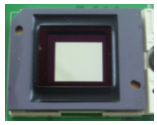
X1240	OPTICAL DEVICE	DMD CHIP	57.JDM0Q.004	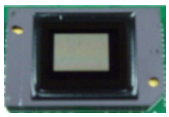

X1240	OPTICAL DEVICE	DMD CHIP	57.JDM0Q.005	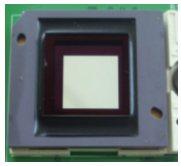
P1340W/X1340WH	OPTICAL DEVICE	DMD CHIP	57.JDPJ3.001	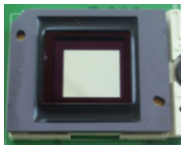
H6510BD	OPTICAL DEVICE	DMD CHIP	57.JFZJ3.004	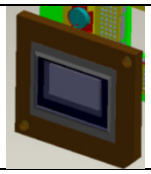
X1140A	OPTICAL DEVICE	ENGINE	57.JERJ3.006	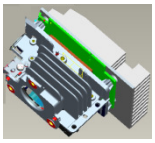
X1240	OPTICAL DEVICE	ENGINE	57.JF2J3.001	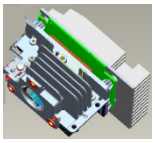
P1340W/X1340WH	OPTICAL DEVICE	ENGINE	57.JF4J3.002	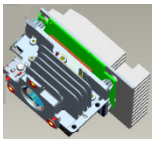
H6510BD	OPTICAL DEVICE	ENGINE	57.JFZJ3.005	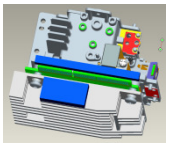
X1140A X1240 P1340W/X1340WH H6510BD	FAN	FAN 60*60*25 150MM	23.JERJ3.001	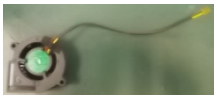
X1140A X1240 P1340W/X1340WH H6510BD	FAN	FAN 80*80*25 170MM	23.JERJ3.002	
X1140A X1240	SPEAKER/MICROPHONE	SPEAKER	23.JERJ3.003	
P1340W/X1340WH	SPEAKER/MICROPHONE	SPEAKER	23.JF4J3.001	

H6510BD	SPEAKER/MICROPHONE	SPEAKER	23.JFZJ3.001	
X1140A X1240	MISCELLANEOUS	FOOT ADJUST	47.JERJ3.001	
P1340W/X1340WH H6510BD	MISCELLANEOUS	FOOT ADJUST	47.JF4J3.001	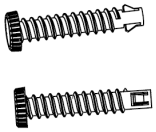
X1140A X1240	MISCELLANEOUS	RUBBER ADJUST	47.JERJ3.002	
P1340W/X1340WH H6510BD	MISCELLANEOUS	RUBBER ADJUST	47.JF4J3.002	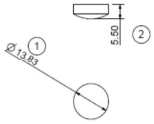
X1140A X1240 P1340W/X1340WH	MISCELLANEOUS	FILM LAMP EXPLOSION	47.JERJ3.003	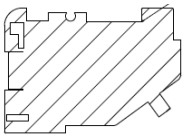
X1140A X1240	MISCELLANEOUS	DUST FILTER	MC.40511.004	
X1140A X1240 P1340W/X1340WH H6510BD	TOOL KIT	TOOL KIT FOR EDID UPLOAD	6K.J900Q.001	

(Note) The updated P/N refers to latest Spare Part List

Appendix A - Code List: IR / RS232 / DDC Data

1. Remote Control Code

IR setting value

Frequency: 38kHz
Protocal: NEC format

b. IR command code

Customer code：0813

- **For X1140A/X1240/X1140:** E1 Remote

87	8E		8F
60	8D		8C
8B	61		80
	82		
83	84		81
	85		
5A	5B	5C	5D
65	66	67	9E
5E	4A	4B	5F

- **For P1340W/X1340WH:** E5 remote

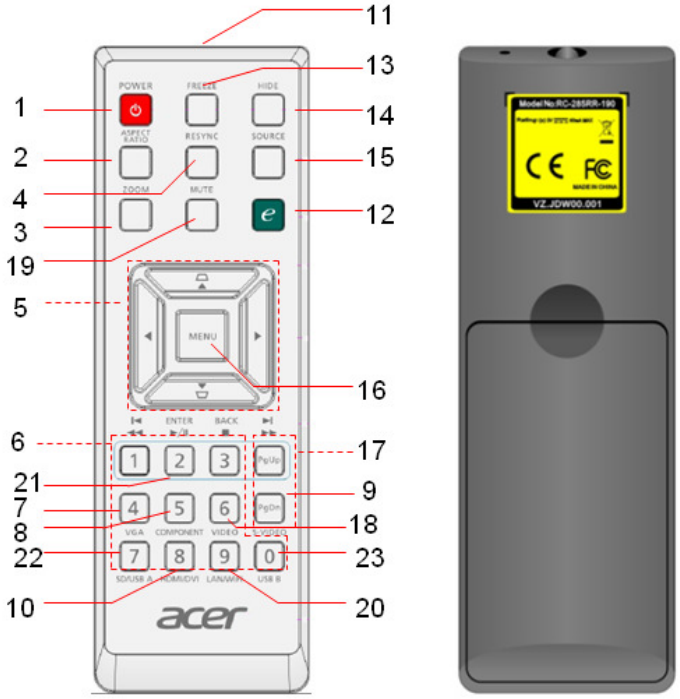

87	8E		8F
60	8D		8C
8B	61		80
	82		
83	84		81
	85		
5A	5B	5C	5D
65	66	67	9E
5E	4A	4B	5F

- **For H6510BD:** E9 remote

87	8E		8F
60	8D		8C
8B	61		80
	82		
83	84		81
	85		
5A	5B	5C	5D
65	66	67	9E
5E	4A	4B	5F

2. RS-232 Command Code

General command type (Projector 'receives' commands)			
No	**Code (character)**	**Function feature**	**Note**
1	OKOKOKOKOK	Power On	support
2	* 0 IR 001	Power On	support
3	* 0 IR 002	Power Off	support
4	* 0 IR 004	Keystone	support
5	* 0 IR 006	Mute	support
6	* 0 IR 007	Freeze	support
7	* 0 IR 008	Menu	support
8	* 0 IR 009	Up	support
9	* 0 IR 010	Down	support
10	* 0 IR 011	Right	support
11	* 0 IR 012	Left	support
12	* 0 IR 013	Enter	Unsupport
13	* 0 IR 014	Re-Sync	support
14	* 0 IR 015	Source Analog RGB for D-sub	support
15	* 0 IR 016	Source Digital RGB	Unsupport
16	* 0 IR 017	Source PbPr for D-sub	support
17	* 0 IR 018	Source S-Video	support
18	* 0 IR 019	Source Composite Video	support
19	* 0 IR 020	Source Component Video	support (only for H6510BD)
20	* 0 IR 021	Aspect ratio 16:9	support
21	* 0 IR 022	Aspect ratio 4:3	support
22	* 0 IR 023	Volume +	support
23	* 0 IR 024	Volume –	support
24	* 0 IR 025	Brightness	support
25	* 0 IR 026	Contrast	support
26	* 0 IR 027	Color Temperature	support
27	* 0 IR 028	Source Analog RGB for DVI Port	Unsupport
28	* 0 IR 029	Source Analog YPbPr for DVI Port	Unsupport
29	* 0 IR 030	Hide	support
30	* 0 IR 031	Source	support
31	* 0 IR 032	Video: Color saturation adjustment	support
32	* 0 IR 033	Video: Hue adjustment	support
33	* 0 IR 034	Video: Sharpness adjustment	support
34	* 0 IR 035	Query Model name	support
35	* 0 IR 036	Query Native display resolution	support
36	* 0 IR 037	Query company name	support
37	* 0 IR 040	Aspect ratioL.Box	support (for P1340W/X1340WH/ H6510BD)
38	* 0 IR 041	Aspect ratio 1:1	Unsupport
39	* 0 IR 042	Keystone Up	support
40	* 0 IR 043	Keystone Down	support
41	* 0 IR 044	Keystone Left	Unsupport
42	* 0 IR 045	Keystone Right	Unsupport
43	* 0 IR 046	Zoom	support

44	* 0 IR 047	e-Key	support
45	* 0 IR 048	Color RGB	support
46	* 0 IR 049	Language	support
47	* 0 IR 050	Source HDMI	support (for P1340W/X1340WH/ H6510BD)
General command type (Projector 'transmits' commands)			
NO	**Code (character)**	**Function feature**	**Note**
1	Model XXXXXXXX	Return the Model name	support
2	Res XXXXX	Return the Native display resolution	support
3	Name XXXXXXXX	Return the company name	support
Lamp command type (Projector 'receives' commands)			
NO	**Code (character)**	**Function feature**	**Note**
1	* 0 Lamp ?	Query the lamp ON/OFF	support
2	* 0 Lamp	Query the lamp hours	support
Lamp command type (Projector 'transmits' commands)			
NO	**Code (character)**	**Function feature**	**Note**
1	Lamp 0	Return Lamp OFF status	support
2	Lamp 1	Return Lamp ON status	support
3	XXXX	Return Lamp hours	support
Source command type (Projector 'receives' commands)			
NO	**Code (character)**	**Function feature**	**Note**
1	* 0 Src ?	Query source input type	support

3. DDC Data

For X1140A/X1240/X1140(Only Dsub DDC):

X1140A	**X1240**	**X1140**
Dsub	Dsub	Dsub
00 FF FF FF FF FF FF 00 04 72 27 14 01 00 00 00 14 16 01 03 0E 00 00 78 0A 43 6E A5 57 4F 9D 25 0D 4E 5E 3F CF 80 31 7C 45 7C 61 7C 81 C0 81 00 81 80 95 00 A9 40 A0 0F 20 00 31 58 1C 20 28 80 14 00 00 00 00 00 00 1E 00 00 00 FD 00 30 78 1F 63 11 00 0A 20 20 20 20 20 20 00 00 00 FC 00 58 31 31 34 30 41 0A 20 20 20 20 20 20 00 00 00 FF 00 4A 45 52 31 31 30 30 31 38 34 30 31 0A 00 C6 acer X1140A DSUB	00 FF FF FF FF FF FF 00 04 72 02 15 01 00 00 00 14 16 01 03 0E 00 00 78 0A 43 6E A5 57 4F 9D 25 0D 4E 5E 3F CF 80 31 7C 45 7C 61 7C 81 C0 81 00 81 80 95 00 A9 40 64 19 00 40 41 00 26 30 18 88 36 00 00 00 00 00 00 1C 00 00 00 FD 00 30 78 1F 63 11 00 0A 20 20 20 20 20 20 00 00 00 FC 00 58 31 32 34 30 0A 20 20 20 20 20 20 20 00 00 00 FF 00 4A 46 32 31 31 30 30 32 38 34 30 35 0A 00 4C acer X1240 DSUB	00 FF FF FF FF FF FF 00 04 72 32 15 01 00 00 00 1E 16 01 03 0E 00 00 78 0A 43 6E A5 57 4F 9D 25 0D 4E 5E 3F CF 80 31 7C 45 7C 61 7C 81 C0 81 00 81 80 95 00 A9 40 A0 0F 20 00 31 58 1C 20 28 80 14 00 00 00 00 00 00 1E 00 00 00 FD 00 30 78 1F 63 11 00 0A 20 20 20 20 20 20 00 00 00 FC 00 58 31 31 34 30 0A 20 20 20 20 20 20 20 00 00 00 FF 00 4A 46 57 31 31 30 30 31 38 34 30 31 0A 00 CB X1140 acer DSUB

For P1340W/X1340WH:

P1340W/X1340WH	P1340W/X1340WH
Dsub	HDMI
00 FF FF FF FF FF FF 00 04 72 04 15 01 00 00 00 03 16 01 03 0E 00 00 78 0A 30 31 A1 5B 56 92 25 13 4F 5B 3F CF 80 31 7C 45 7C 61 7C 81 3C 81 80 81 C0 95 00 A9 40 9E 20 00 90 51 20 1F 30 48 80 36 00 00 00 00 00 00 1C 00 00 00 FD 00 30 78 1F 63 11 00 0A 20 20 20 20 20 20 00 00 00 FC 00 50 31 33 34 30 57 0A 20 20 20 20 20 20 00 00 00 FF 00 4A 46 34 31 31 30 30 31 38 34 30 31 0A 00 60 6 ACER P1340W ADT A5 ddc2	00 FF FF FF FF FF FF 00 04 72 04 15 01 00 00 00 03 16 01 03 80 00 00 78 0A 30 31 A1 5B 56 92 25 13 4F 5B 3F CF 80 31 7C 45 7C 61 7C 81 3C 81 80 81 C0 95 00 D1 C0 9E 20 00 90 51 20 1F 30 48 80 36 00 00 00 00 00 00 1C 00 00 00 FD 00 30 78 1F 63 11 00 0A 20 20 20 20 20 20 00 00 00 FC 00 50 31 33 34 30 57 0A 20 20 20 20 20 20 00 00 00 FF 00 4A 46 34 31 31 30 30 31 38 34 30 31 0A 01 45 02 03 2A F1 4C 01 06 02 15 11 84 13 05 14 10 1F 20 23 09 17 07 83 01 00 00 6C 03 0C 00 10 00 38 28 20 A0 02 01 41 E3 05 03 01 01 1D 80 D0 72 1C 16 20 10 2C 25 80 C4 8E 21 00 00 9E 01 1D 80 18 71 1C 16 20 58 2C 25 00 C4 8E 21 00 00 9E 01 1D 00 BC 52 D0 1E 20 B8 28 55 40 C4 8E 21 00 00 1E 8C 0A A0 14 51 F0 16 00 26 7C 43 00 13 8E 21 00 00 B8 00 00 00 00 00 00 00 00 00 00 00 00 00 26 6 ACER P1340W ADT A5 ddc2

For H6510BD:

H6510BD	**H6510BD**	**H6510BD**
Dsub	HDMI1	HDMI2
00 FF FF FF FF FF FF 00 04 72 35 15 01 00 00 00 28 16 01 03 0E 00 00 78 0A 43 6E A5 57 4F 9D 25 0D 4E 5E 3F CF 80 31 7C 45 7C 61 7C 81 3C 81 C0 81 80 95 00 A9 40 02 3A 80 18 71 38 2D 40 58 2C 45 00 00 00 00 00 00 1E 00 00 00 FD 00 30 78 1F 66 11 00 0A 20 20 20 20 20 20 00 00 00 FC 00 48 36 35 31 30 42 44 0A 20 20 20 20 20 00 00 00 FF 00 4A 46 5A 31 31 30 30 31 38 34 30 31 0A 00 DD H6510BD acer DSUB A5E	00 FF FF FF FF FF FF 00 04 72 35 15 01 00 00 00 28 16 01 03 80 00 00 78 0A 43 6E A5 57 4F 9D 25 0D 4E 5E 3F CF 80 31 7C 45 7C 61 7C 81 3C 81 80 81 C0 95 00 D1 C0 02 3A 80 18 71 38 2D 40 58 2C 45 00 00 00 00 00 00 1E 00 00 00 FD 00 17 78 0F 66 11 00 0A 20 20 20 20 20 20 00 00 00 FC 00 48 36 35 31 30 42 44 0A 20 20 20 20 20 00 00 00 FF 00 4A 46 5A 31 31 30 30 31 38 34 30 31 0A 01 EB 02 03 29 F1 4D 06 02 15 11 04 13 05 14 90 1F 20 21 22 23 09 17 07 83 01 00 00 6A 03 0C 00 10 00 38 28 20 80 00 E3 05 03 01 8C 0A D0 8A 20 E0 2D 10 10 3E 96 00 C4 8E 21 00 00 18 01 1D 00 72 51 D0 1E 20 6E 28 55 00 C4 8E 21 00 00 1E 01 1D 80 18 71 1C 16 20 58 2C 25 00 C4 8E 21 00 00 9E F3 39 80 18 71 38 2D 40 58 2C 45 00 C4 8E 21 00 00 1E 00 00 00 00 00 00 00 00 00 00 00 00 00 00 73 H6510BD acer HDMI1	00 FF FF FF FF FF FF 00 04 72 35 15 01 00 00 00 28 16 01 03 80 00 00 78 0A 43 6E A5 57 4F 9D 25 0D 4E 5E 3F CF 80 31 7C 45 7C 61 7C 81 3C 81 80 81 C0 95 00 D1 C0 02 3A 80 18 71 38 2D 40 58 2C 45 00 00 00 00 00 00 1E 00 00 00 FD 00 17 78 0F 66 11 00 0A 20 20 20 20 20 20 00 00 00 FC 00 48 36 35 31 30 42 44 0A 20 20 20 20 20 00 00 00 FF 00 4A 46 5A 31 31 30 30 31 38 34 30 31 0A 01 EB 02 03 29 F1 4D 06 02 15 11 04 13 05 14 90 1F 20 21 22 23 09 17 07 83 01 00 00 6A 03 0C 00 20 00 38 28 20 80 00 E3 05 03 01 8C 0A D0 8A 20 E0 2D 10 10 3E 96 00 C4 8E 21 00 00 18 01 1D 00 72 51 D0 1E 20 6E 28 55 00 C4 8E 21 00 00 1E 01 1D 80 18 71 1C 16 20 58 2C 25 00 C4 8E 21 00 00 9E F3 39 80 18 71 38 2D 40 58 2C 45 00 C4 8E 21 00 00 1E 00 00 00 00 00 00 00 00 00 00 00 00 00 00 63 H6510BD acer HDMI2

Appendix B – Schematics

Main Board:

- **X1140A/X1240/X1140:**

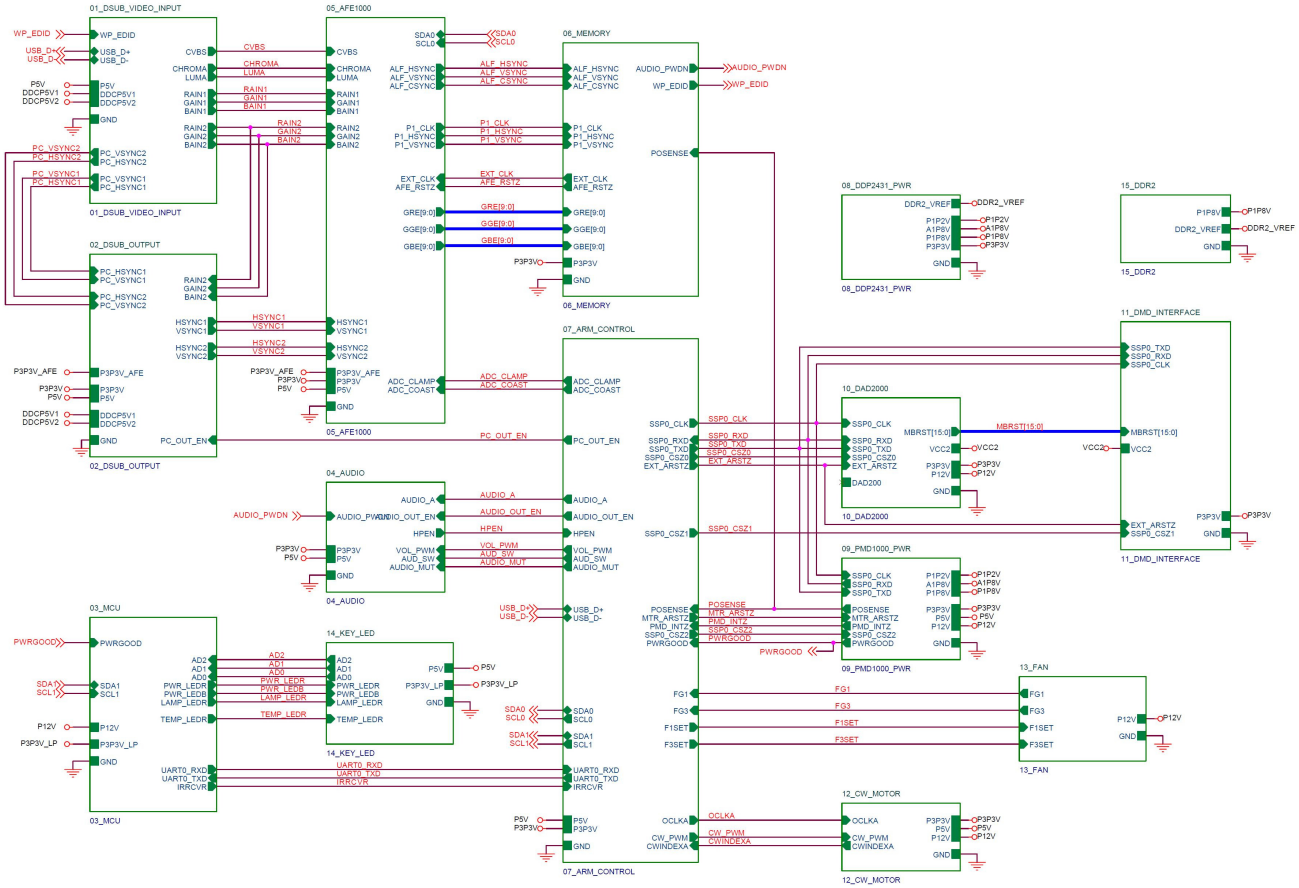

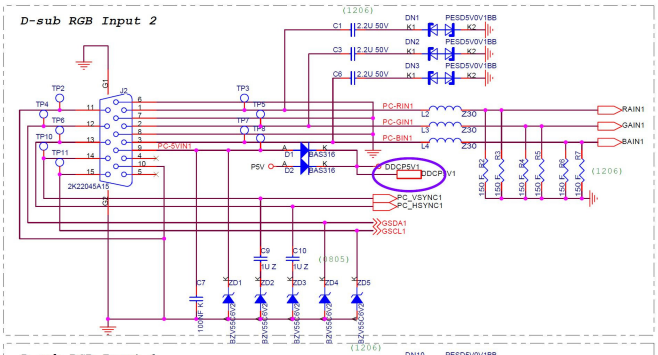

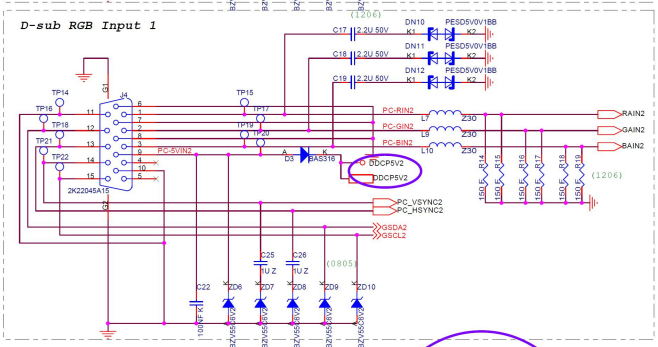

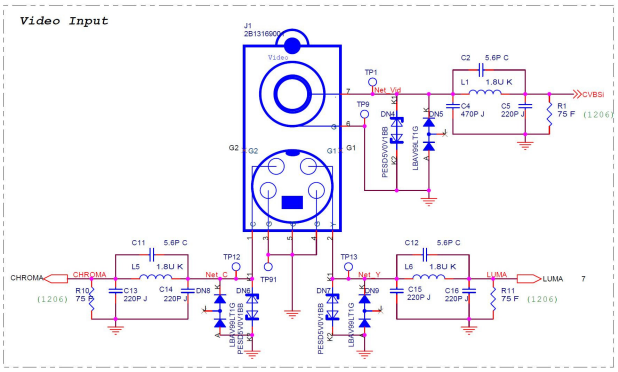

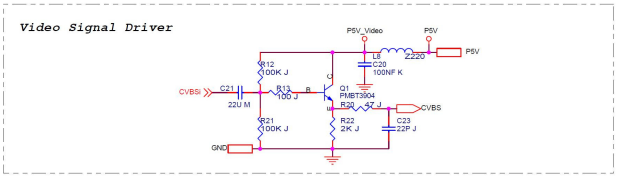

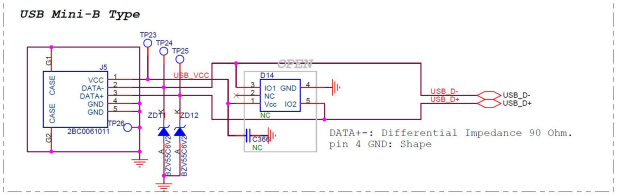

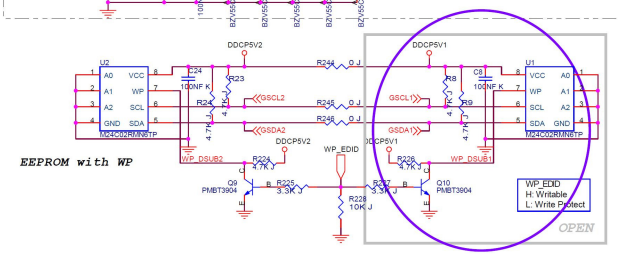

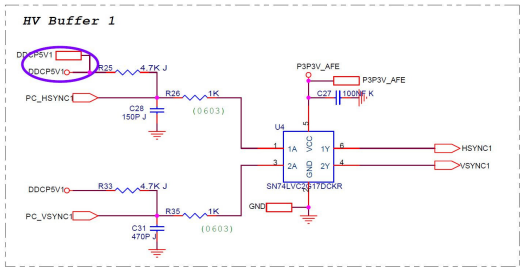
HV Buffer 1
DDCP5V1
DDCP5V1
PC_HSYNC1
PC_VSYNC1
DDCP5V
R25 4.7K J
R26 1K
R33 4.7K J
R35 1K
C26 150P J
C31 470P J
(0603)
P3P3V_AFE
C27 100NF K
U4
SN74LVC2G157DCKR
HSYNC1
VSYNC1
GND

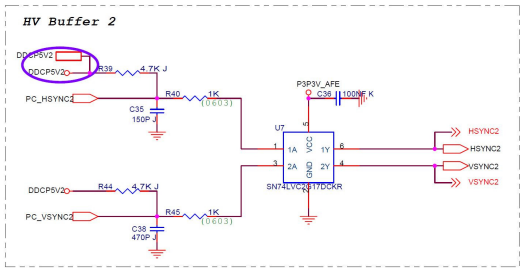
HV Buffer 2
DDCP5V2
DDCP5V2
PC_HSYNC2
PC_VSYNC2
DDCP5V2
R39 4.7K J
R40 1K
R44 4.7K J
R45 1K
C35 150P J
C38 470P J
(0603)
P3P3V_AFE
C36 100NF K
U7
SN74LVC2G157DCKR
HSYNC2
VSYNC2

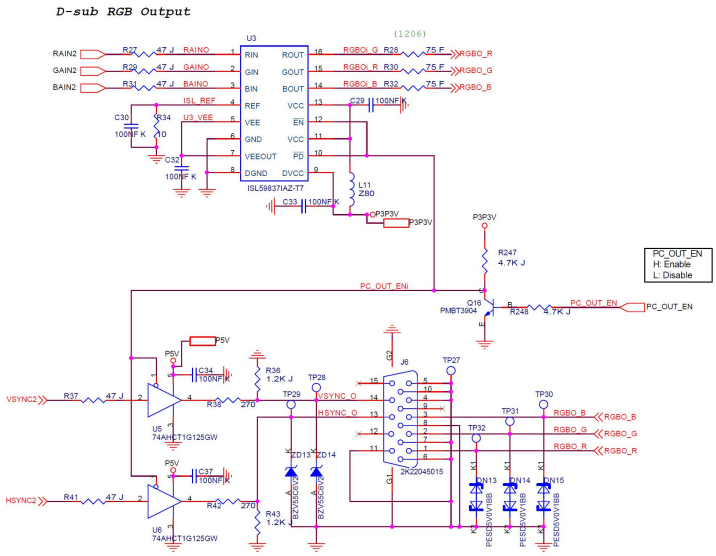
D-sub RGB Output
U3
ISL59837IAZ-T7
RAIN2
GAIN2
BAIN2
RGBO_R
RGBO_G
RGBO_B
P3P3V
PC_OUT_EN
H: Enable
L: Disable
Q16
PMBT3904
R247 4.7K J
R248 4.7K J
U5
74AHCT1G125GW
U6
74AHCT1G125GW
VSYNC2
HSYNC2
J8
2K22045015
TP27
TP28
TP29
TP30
TP31
TP32
ZD13
ZD14
DN13
DN14
DN15
PESD5V0V1BB

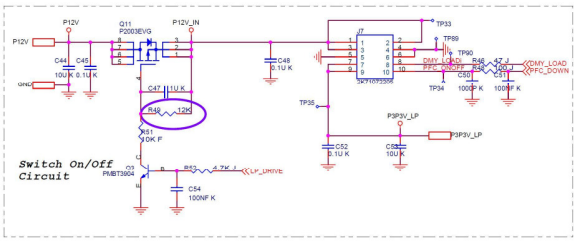
Switch On/Off Circuit
P12V
P12V_IN
Q11
P2003EVG
Q3
PMBT3904
J7
2K10103SM
DMY_LOAD
PFC_DOWN
P3P3V_LP
LP_DRIVE
C54 100NF K

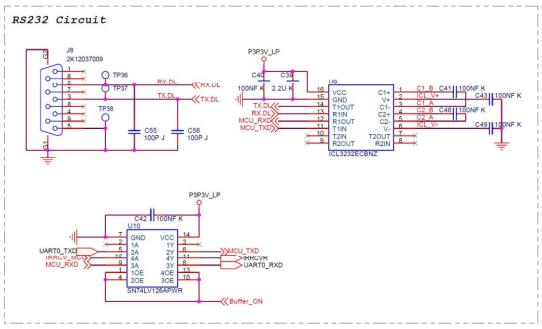
RS232 Circuit
J8
2K12037009
U9
ICL3232ECBNZ
U10
SN74LV126APWR
UART0_TXD
UART0_RXD
MCU_TXD
MCU_RXD
Buffer_ON

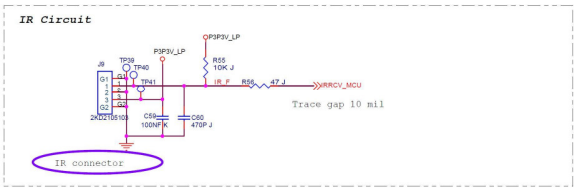
IR Circuit
J9
2K02105103
P3P3V_LP
IR_F
RRCV_MCU
Trace gap 10 mil
IR connector

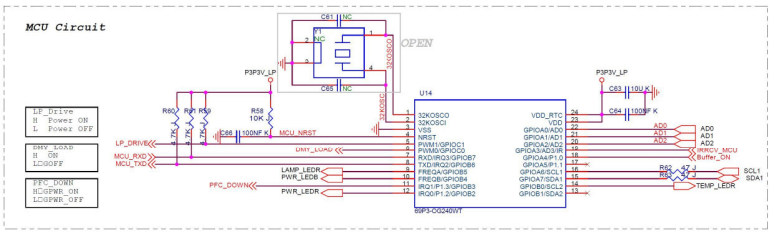
MCU Circuit
U14
89P3-C02405WT
OPEN
LP_Drive
H Power ON
L Power OFF
DMY_LOAD
H ON
L:OFF
PFC_DOWN
H:OFF
L:OFF
LP_DRIVE
MCU_RXD
MCU_TXD
MCU_NRST
DMY_LOAD
LAMP_LEDR
PWR_LEDR
PFC_DOWN
TEMP_LEDR
RRCV_MCU
Buffer_ON
P3P3V_LP

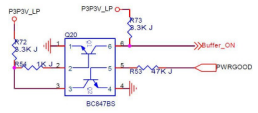
P3P3V_LP
Q20
BC847BS
Buffer_ON
PWRGOOD

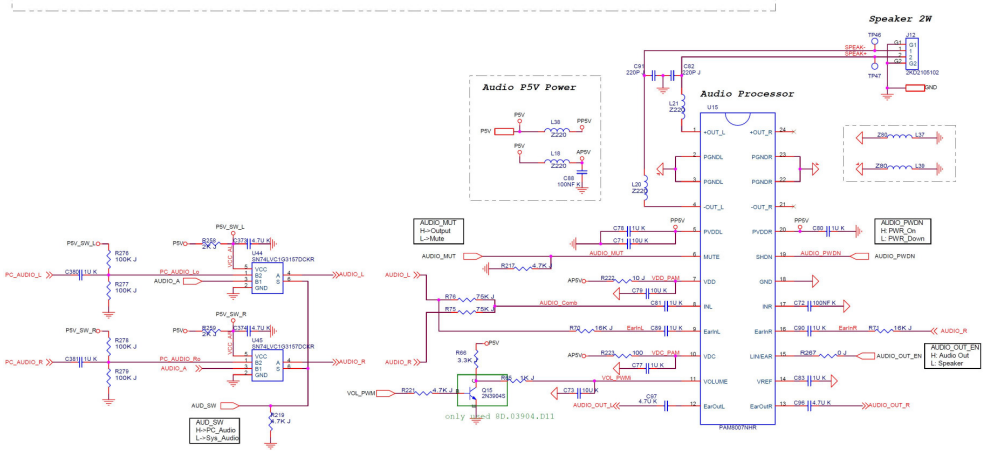
Speaker 2W
Audio P5V Power
Audio Processor
U15
PAM8007NHR
AUDIO_MUT
H:=Output
L:=Mute
AUDIO_PWDN
H: PWR_On
L: PWR_Down
AUDIO_OUT_EN
H: Audio Out
L: Speaker
AUD_SW
H:=PC_Audio
L:=Sys_Audio
U14
74LVC1G3157DCKR
Q15
2N3904S
only used 8D.03904.D11

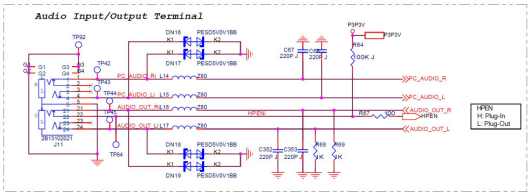
Audio Input/Output Terminal
J11
2B13103221
HPEN
H: Plug-In
L: Plug-Out
PC_AUDIO_R
PC_AUDIO_L
AUDIO_OUT_R
AUDIO_OUT_L

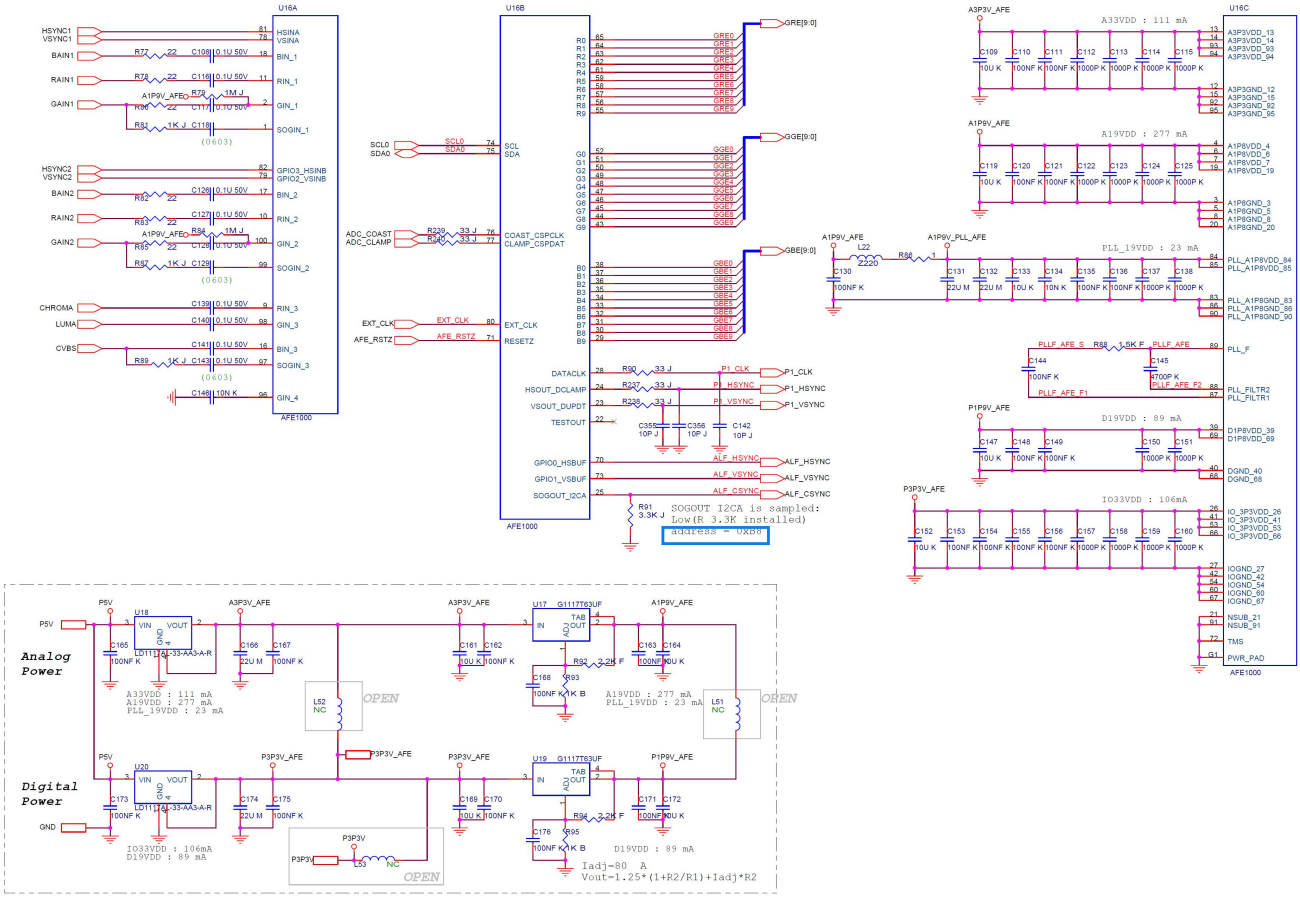
U16A
AFE1000
U16B
AFE1000
U16C
AFE1000
A33VDD : 111 mA
A19VDD : 277 mA
PLL_19VDD : 23 mA
D19VDD : 89 mA
IO33VDD : 106mA
SOGOUT I2CA is sampled:
Low(R 3.3K installed)
address = 0xB8
Analog Power
Digital Power
OPEN
Iadj=80 A
Vout=1.25*(1+R2/R1)+Iadj*R2

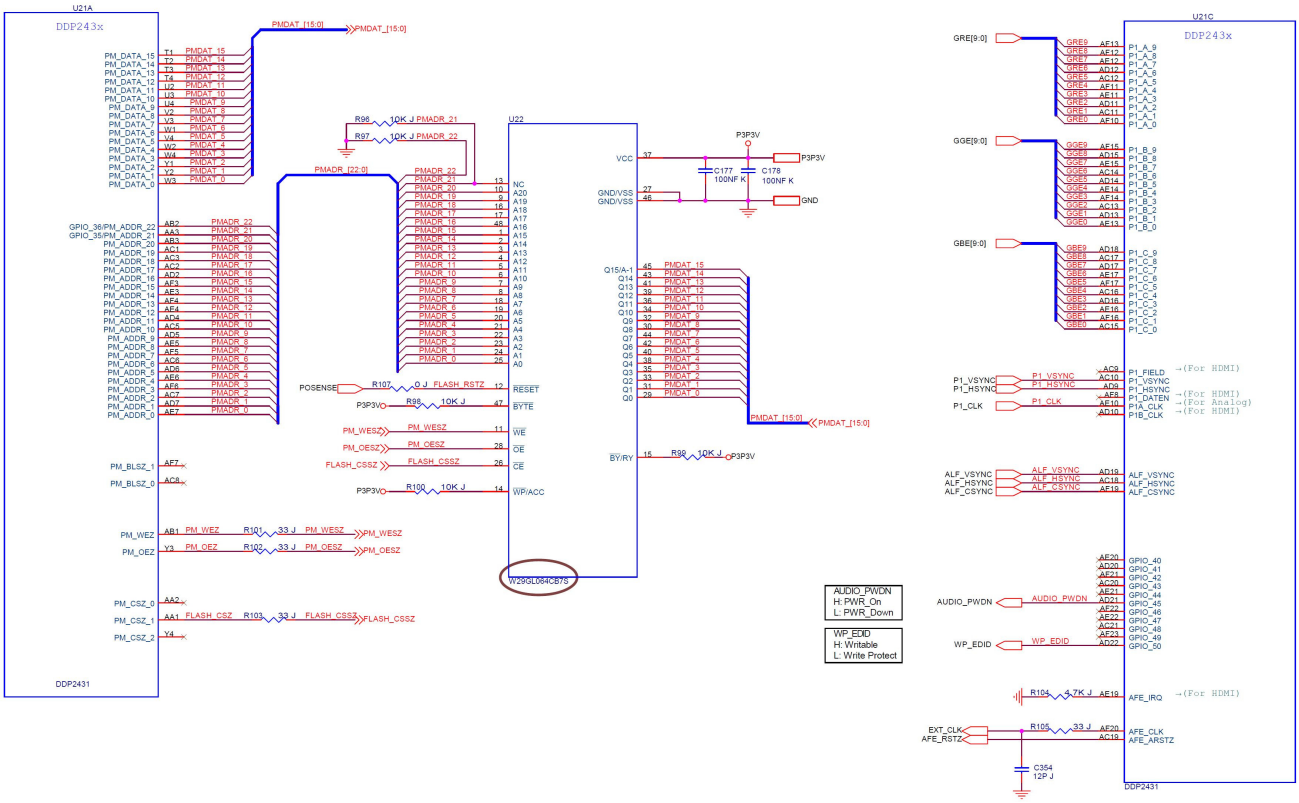
U21A
DDP243x
DDP2431
U22
W29GL064CB70
U21C
DDP243x
DDP2431
AUDIO_PWDN
H: PWR_On
L: PWR_Down
WP_EDID
H: Writable
L: Write Protect

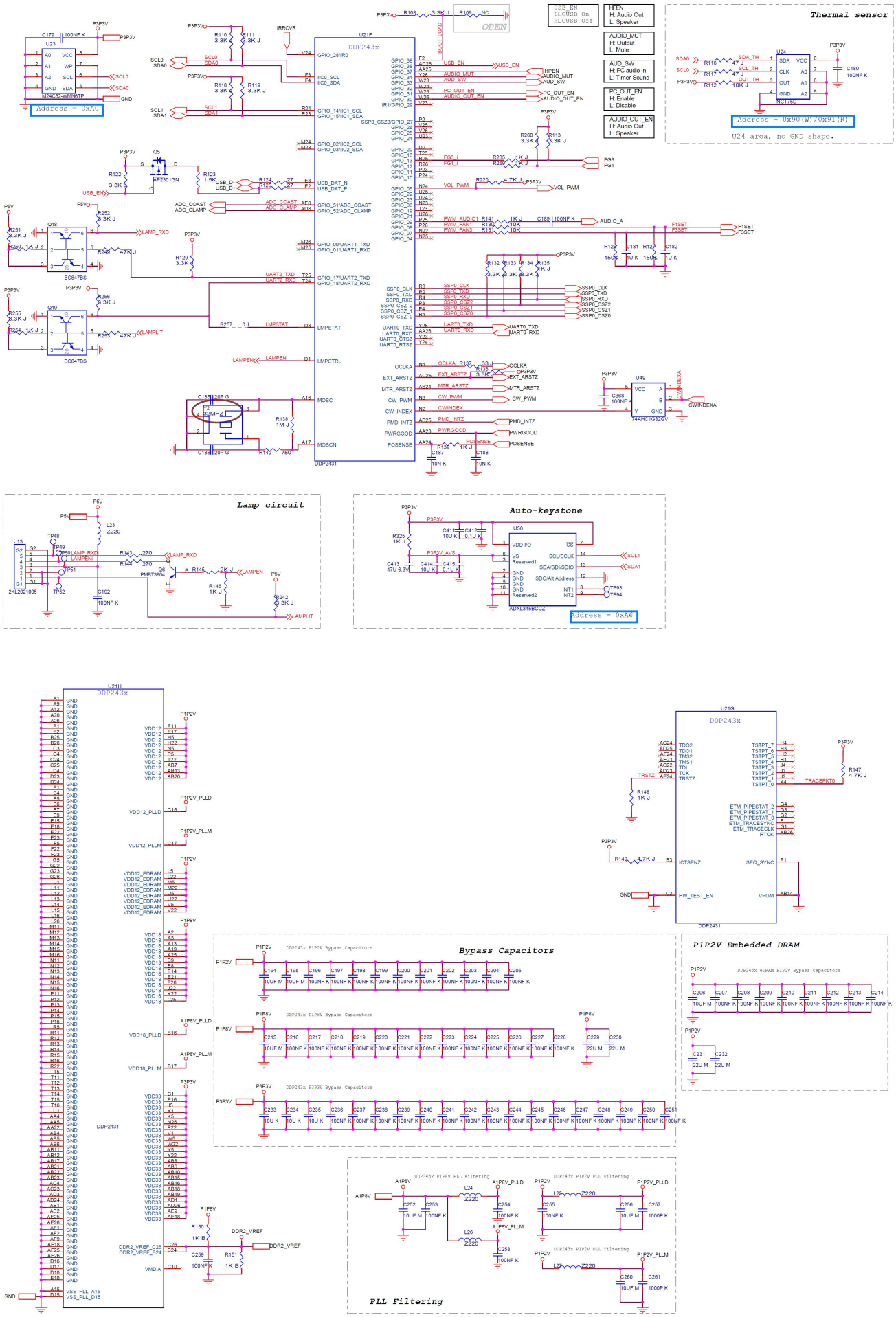
Thermal sensor
Address = 0x90(W)/0x91(R)
U24 area, no GND shape.
Lamp circuit
Auto-keystone
Address = 0xA6
Bypass Capacitors
P1P2V Embedded DRAM
PLL Filtering
DDP243x
DDP2431

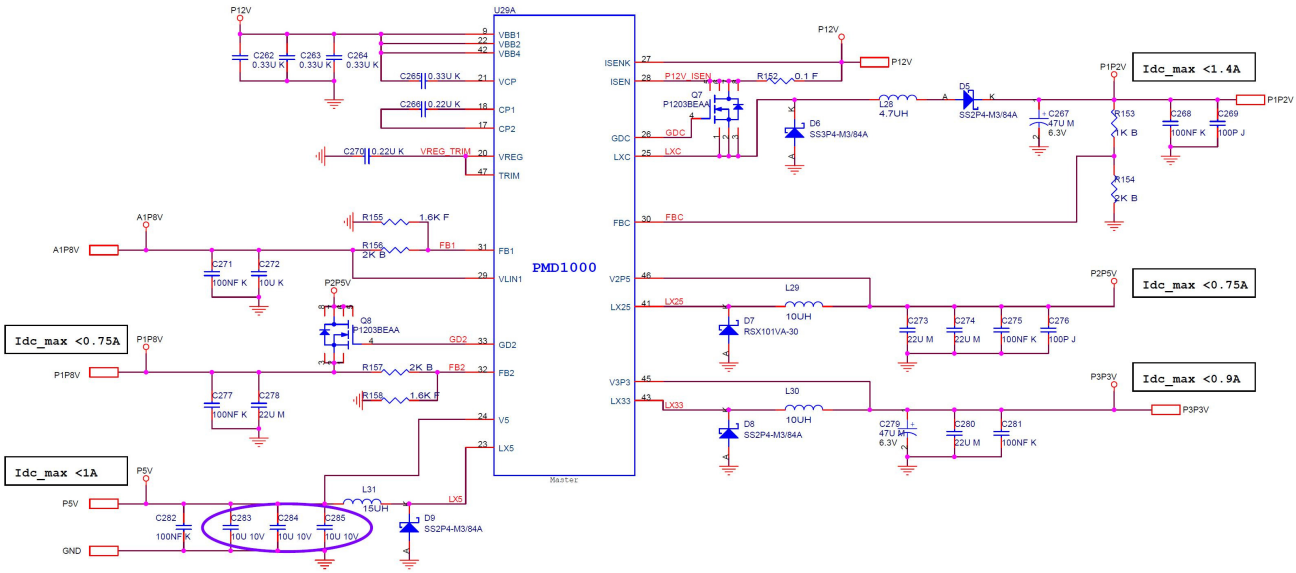
U29A
PMD1000
Master
Idc_max <1.4A
Idc_max <0.75A
Idc_max <0.9A
Idc_max <1A
P12V
P1P2V
P2P5V
P3P3V
P1P8V
A1P8V
P5V
GND
ISENK
ISEN
GDC
LXC
FBC
V2P5
LX25
V3P3
LX33
VBB1
VBB2
VBB4
VCP
CP1
CP2
VREG
TRIM
FB1
VLIN1
GD2
FB2
V5
LX5
VREG_TRIM
L28
4.7UH
L29
10UH
L30
10UH
L31
15UH
D5
SS2P4-M3/84A
D6
SS3P4-M3/84A
D7
RSX101VA-30
D8
SS2P4-M3/84A
D9
SS2P4-M3/84A
Q7
P1203BEAA
Q8
P1203BEAA
R152
0.1 F
R153
1K B
R154
2K B
R155
1.6K F
R156
2K B
R157
2K B
R158
1.6K F

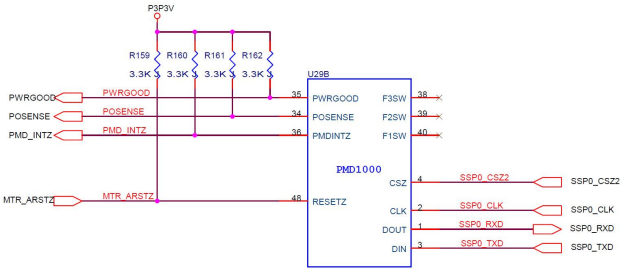
P3P3V
R159
3.3K
R160
3.3K
R161
3.3K
R162
3.3K
U29B
PMD1000
PWRGOOD
POSENSE
PMD_INTZ
MTR_ARSTZ
F3SW
F2SW
F1SW
CSZ
CLK
DOUT
DIN
RESETZ
SSP0_CSZ2
SSP0_CLK
SSP0_RXD
SSP0_TXD

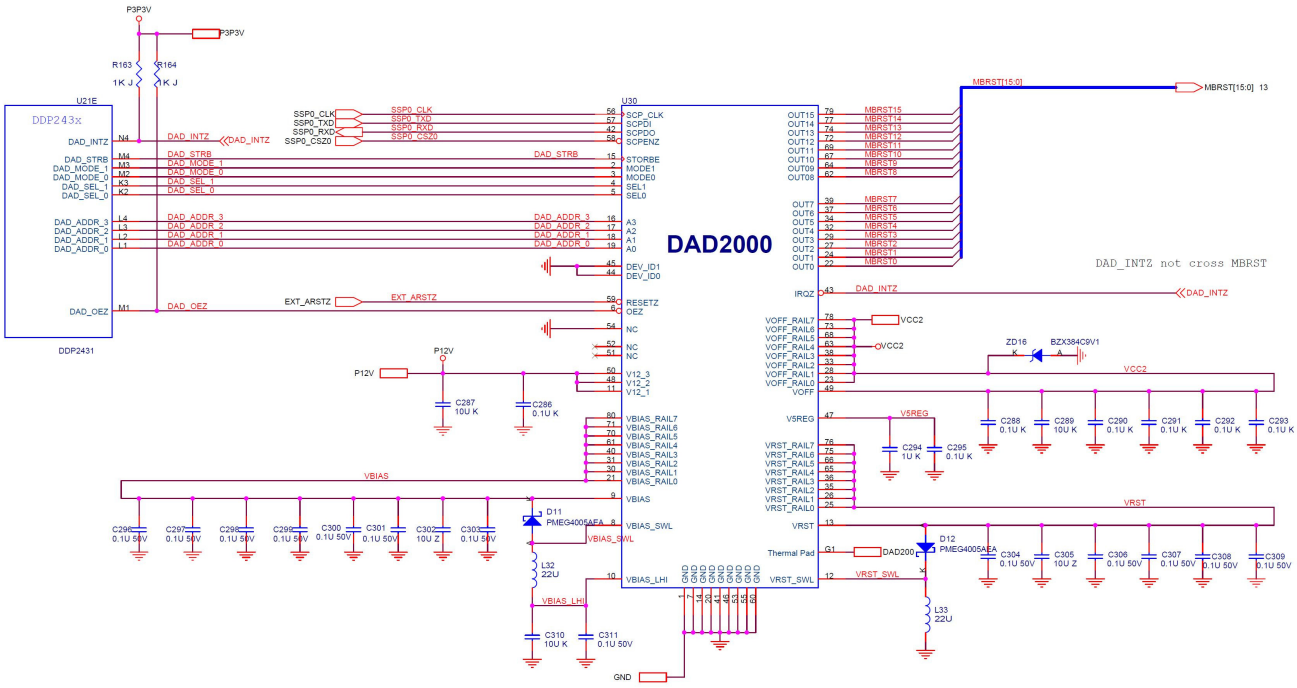
U21E
DDP243x
DDP2431
U30
DAD2000
DAD_INTZ not cross MBRST
MBRST[15:0]
P3P3V
P12V
VCC2
V5REG
VRST
VBIAS
GND
R163
1K J
R164
1K J
DAD_INTZ
DAD_STRB
DAD_MODE_1
DAD_MODE_0
DAD_SEL_1
DAD_SEL_0
DAD_ADDR_3
DAD_ADDR_2
DAD_ADDR_1
DAD_ADDR_0
DAD_OEZ
EXT_ARSTZ
SCP_CLK
SCPDI
SCPDO
SCPENZ
STORBE
MODE1
MODE0
SEL1
SEL0
A3
A2
A1
A0
DEV_ID1
DEV_ID0
RESETZ
OEZ
NC
V12_3
V12_2
V12_1
VBIAS_RAIL7
VBIAS_RAIL6
VBIAS_RAIL5
VBIAS_RAIL4
VBIAS_RAIL3
VBIAS_RAIL2
VBIAS_RAIL1
VBIAS_RAIL0
VBIAS_SWL
VBIAS_LHI
VRST_SWL
IRQZ
Thermal Pad
D11
PMEG4005AEA
D12
PMEG4005AEA
ZD16
BZX384C9V1
L32
22U
L33
22U

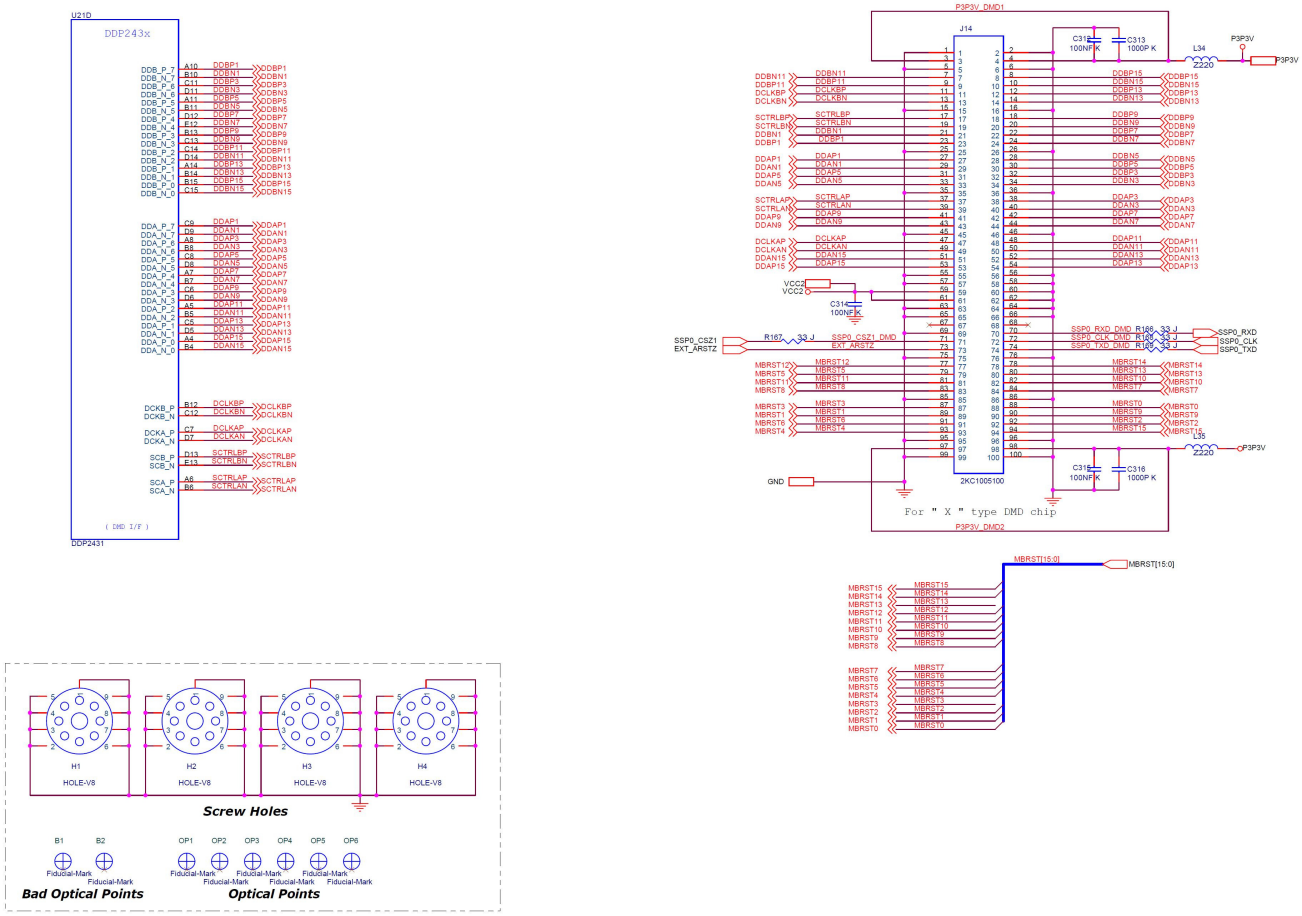
U21D
DDP243x
DDP2431
J14
P3P3V_DMD1
P3P3V_DMD2
2KC1005100
For " X " type DMD chip
MBRST[15:0]
H1
H2
H3
H4
HOLE-V8
Screw Holes
Fiducial-Mark
Bad Optical Points
Optical Points

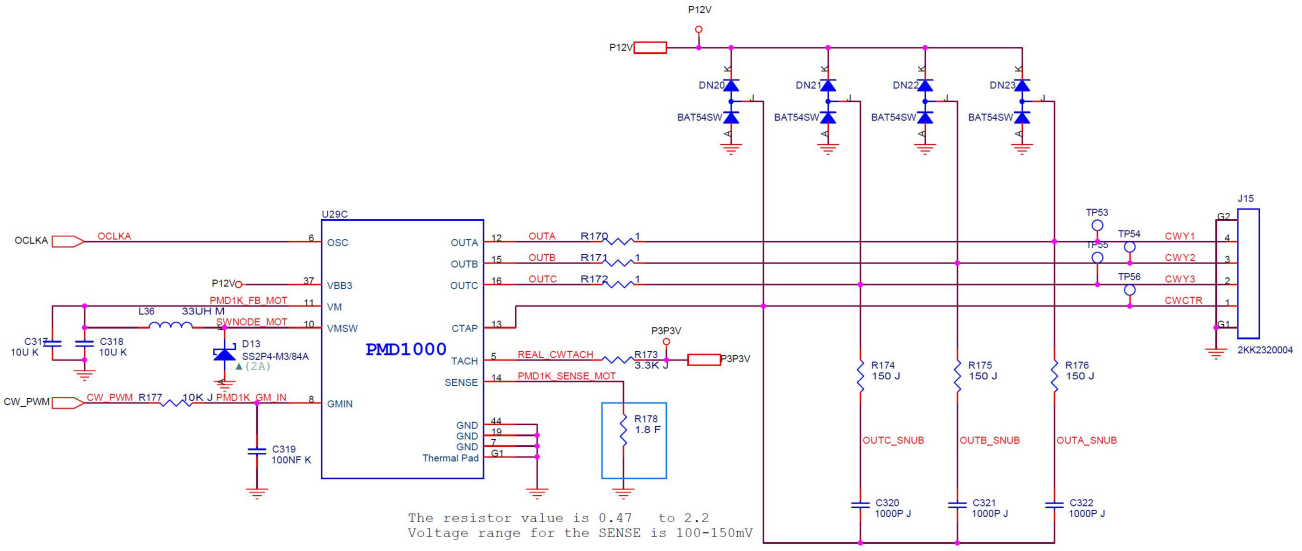
P12V
U29C
PMD1000
OCLKA
CW_PWM
OUTA
OUTB
OUTC
CTAP
TACH
SENSE
GMIN
REAL_CWTACH
PMD1K_SENSE_MOT
PMD1K_FB_MOT
SWNODE_MOT
PMD1K_GM_IN
D13
SS2P4-M3/84A
J15
2KK2320004
CWY1
CWY2
CWY3
CWCTR
OUTC_SNUB
OUTB_SNUB
OUTA_SNUB
The resistor value is 0.47 to 2.2
Voltage range for the SENSE is 100-150mV

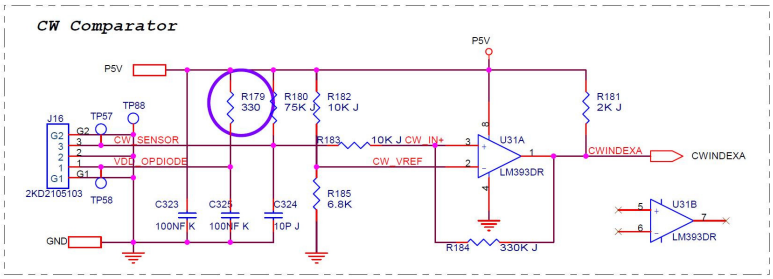
CW Comparator
P5V
J16
2KD2105103
CW_SENSOR
VDD_OPDIODE
CWINDEXA
U31A
U31B
LM393DR
GND

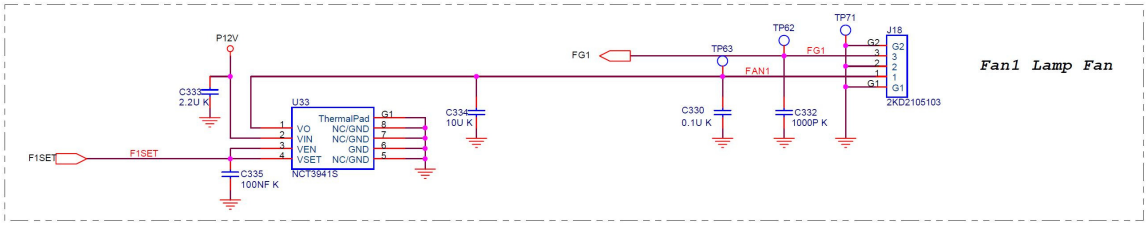

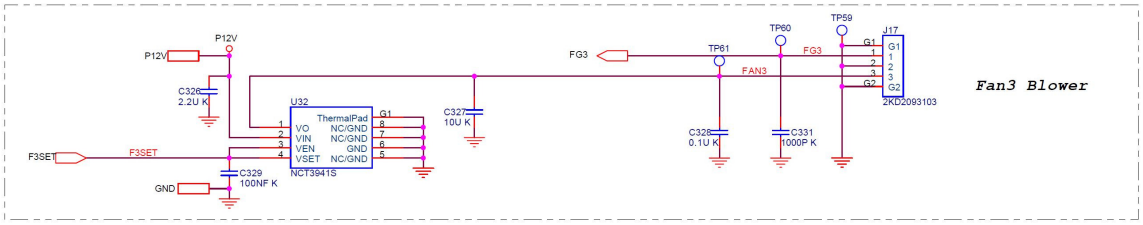

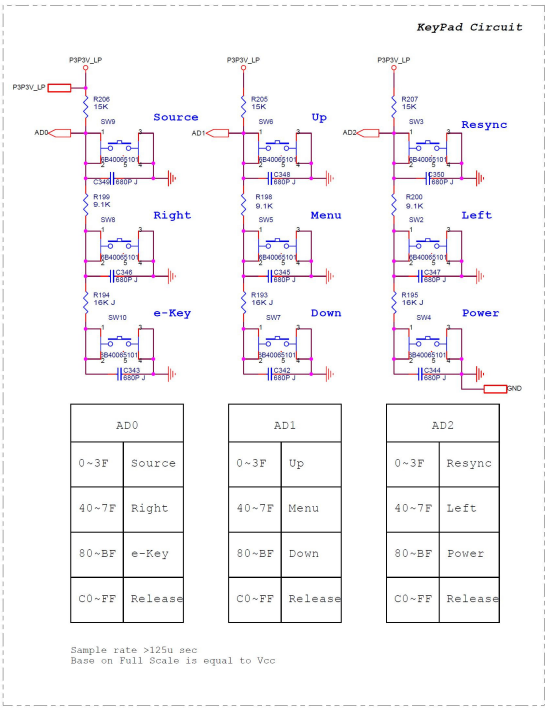

AD0	
0~3F	Source
40~7F	Right
80~BF	e-Key
C0~FF	Release

AD1	
0~3F	Up
40~7F	Menu
80~BF	Down
C0~FF	Release

AD2	
0~3F	Resync
40~7F	Left
80~BF	Power
C0~FF	Release

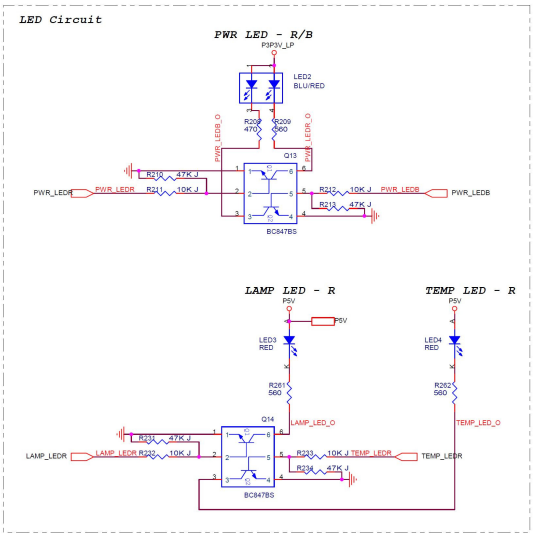

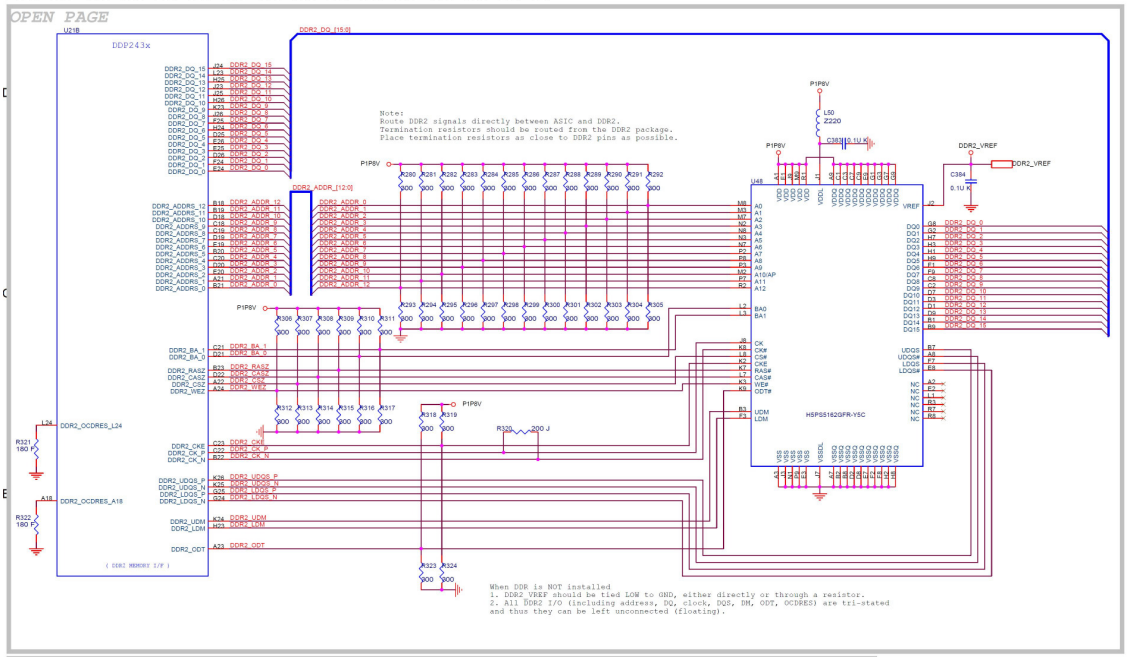

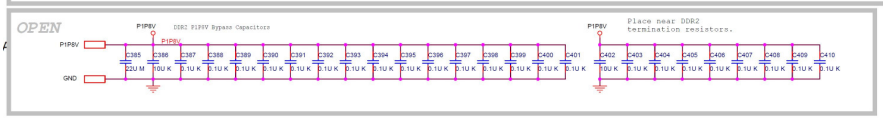

- **P1340W/X1340WH:**

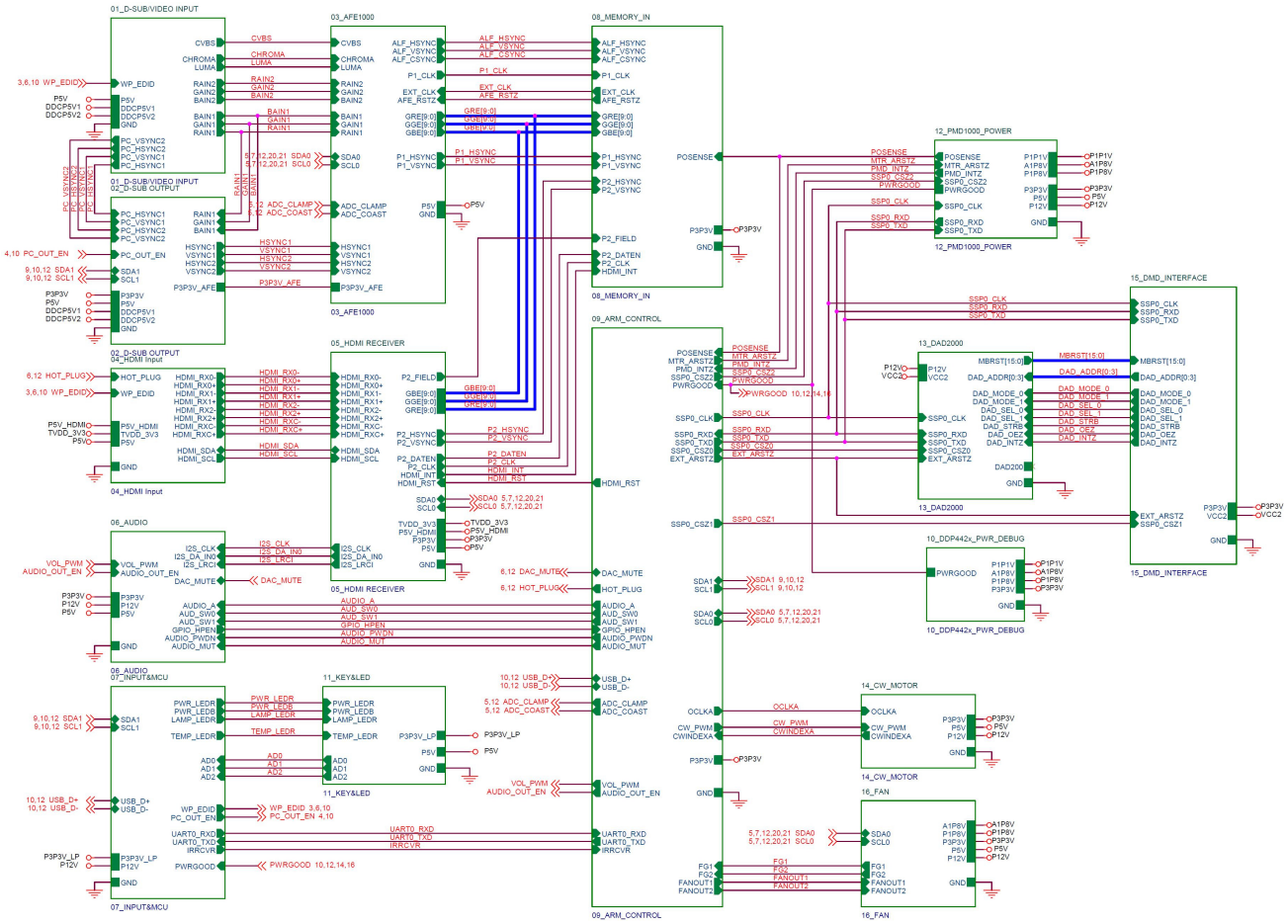

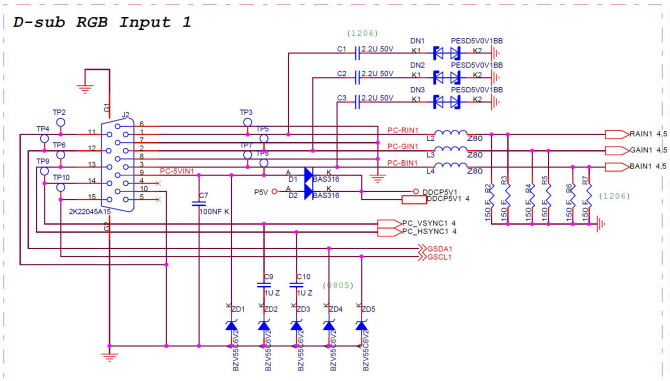

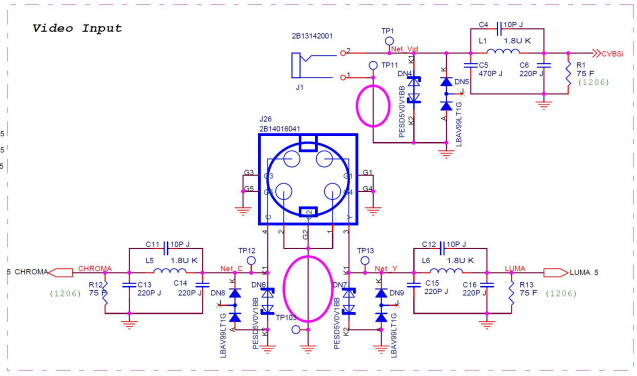

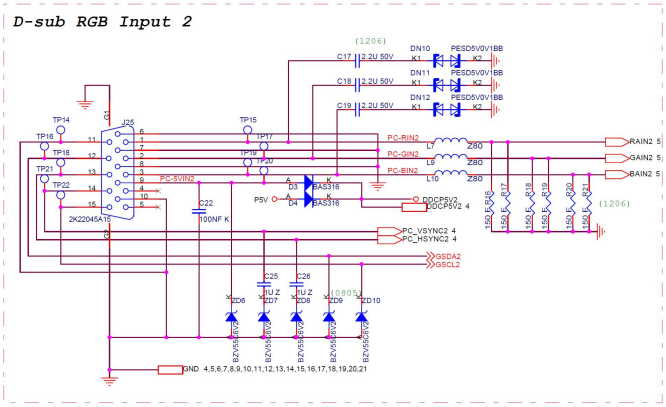

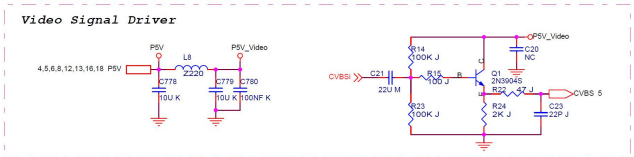

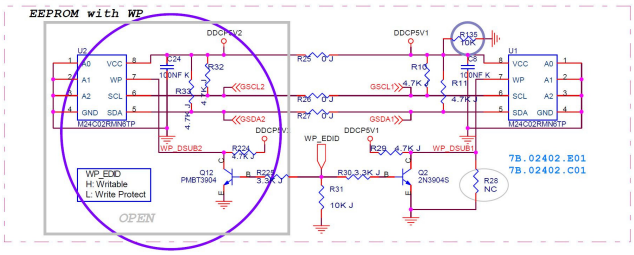

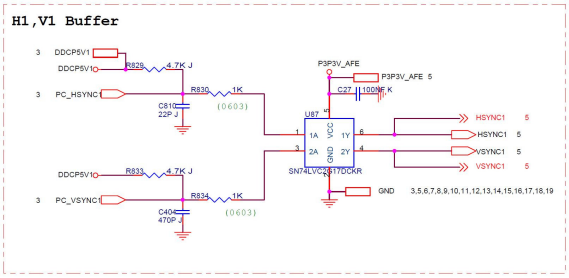
H1,V1 Buffer
DDCP5V1
PC_HSYNC1
DDCP5V1
PC_VSYNC1
R829 4.7K J
R830 1K
R833 4.7K J
R834 1K
C810 22P J
C404 470P J
(0603)
P3P3V_AFE
P3P3V_AFE 5
C27 100NF K
U87
SN74LVC2G17DCKR
HSYNC1 5
HSYNC1 5
VSYNC1 5
VSYNC1 5
GND 3,5,6,7,8,9,10,11,12,13,14,15,16,17,18,19

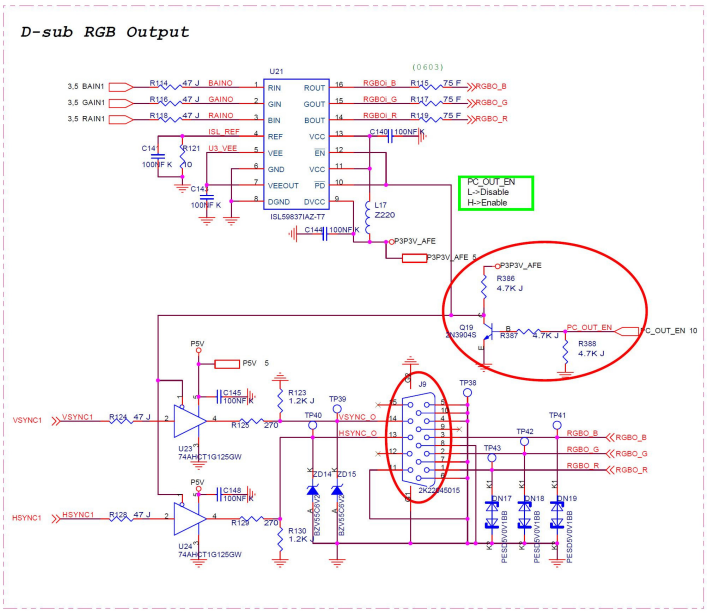
D-sub RGB Output
U21
ISL59837IAZ-T7
3,5 BAIN1
3,5 GAIN1
3,5 RAIN1
RGBO_B
RGBO_G
RGBO_R
PC_OUT_EN
L->Disable
H->Enable
P3P3V_AFE
P5V
U23
74AHCT1G125GW
U24
74AHCT1G125GW
VSYNC1
HSYNC1
J8
2K2-248015
TP38
TP39
TP40
TP41
TP42
TP43
PC_OUT_EN 10

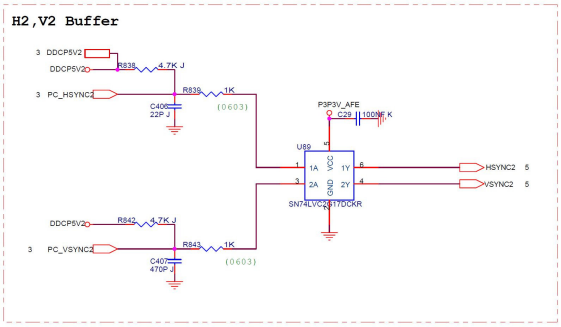
H2,V2 Buffer
DDCP5V2
PC_HSYNC2
DDCP5V2
PC_VSYNC2
R838 4.7K J
R839 1K
R842 4.7K J
R843 1K
C400 22P J
C407 470P J
(0603)
P3P3V_AFE
C29 100NF K
U89
SN74LVC2G17DCKR
HSYNC2 5
VSYNC2 5

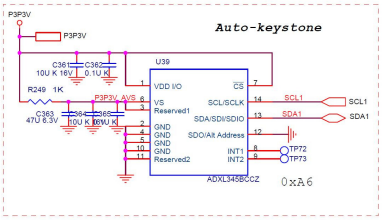
Auto-keystone
P3P3V
U39
ADXL345BCCZ
SCL1
SDA1
TP72
TP73
0xA6

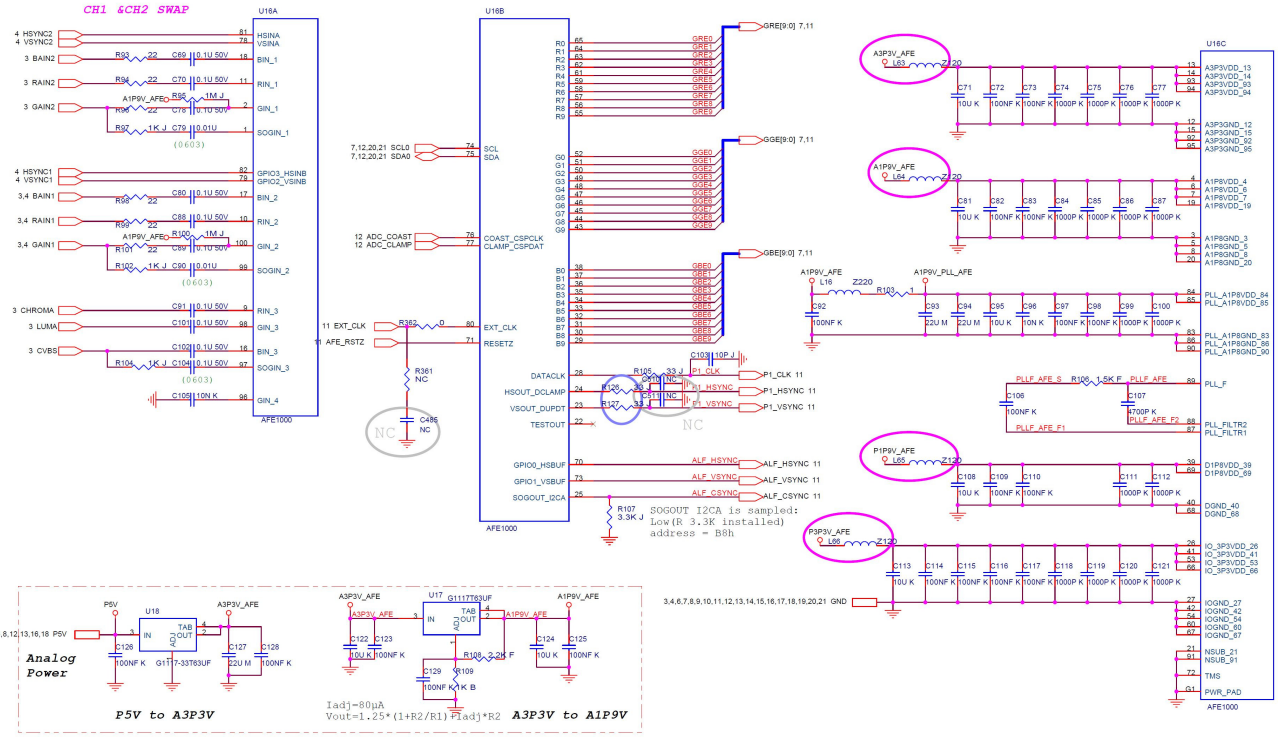
CH1 &CH2 SWAP
U16A
AFE1000
U16B
AFE1000
U16C
AFE1000
GRE[9:0] 7,11
GGE[9:0] 7,11
GBE[9:0] 7,11
SOGOUT I2CA is sampled:
Low(R 3.3K installed)
address = B8h
NC
A3P3V_AFE
A1P9V_AFE
P1P9V_AFE
P3P3V_AFE
A1P9V_PLL_AFE
PLL_AFE_S
PLL_AFE
PLL_AFE_F1
PLL_AFE_F2
3,4,6,7,8,9,10,11,12,13,14,15,16,17,18,19,20,21 GND

Analog
Power
P5V
U18
A3P3V_AFE
U17
G1117T63UF
A1P9V_AFE
Iadj=80μA
Vout=1.25*(1+R2/R1)+Iadj*R2
P5V to A3P3V
A3P3V to A1P9V

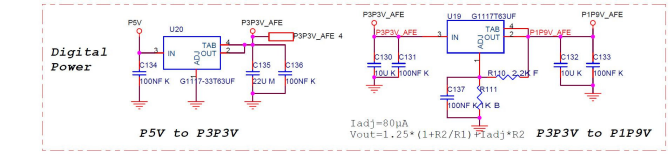
Digital
Power
P5V
U20
P3P3V_AFE
U19
G1117T63UF
P1P9V_AFE
Iadj=80μA
Vout=1.25*(1+R2/R1)+Iadj*R2
P5V to P3P3V
P3P3V to P1P9V

HDMI INTERFACE

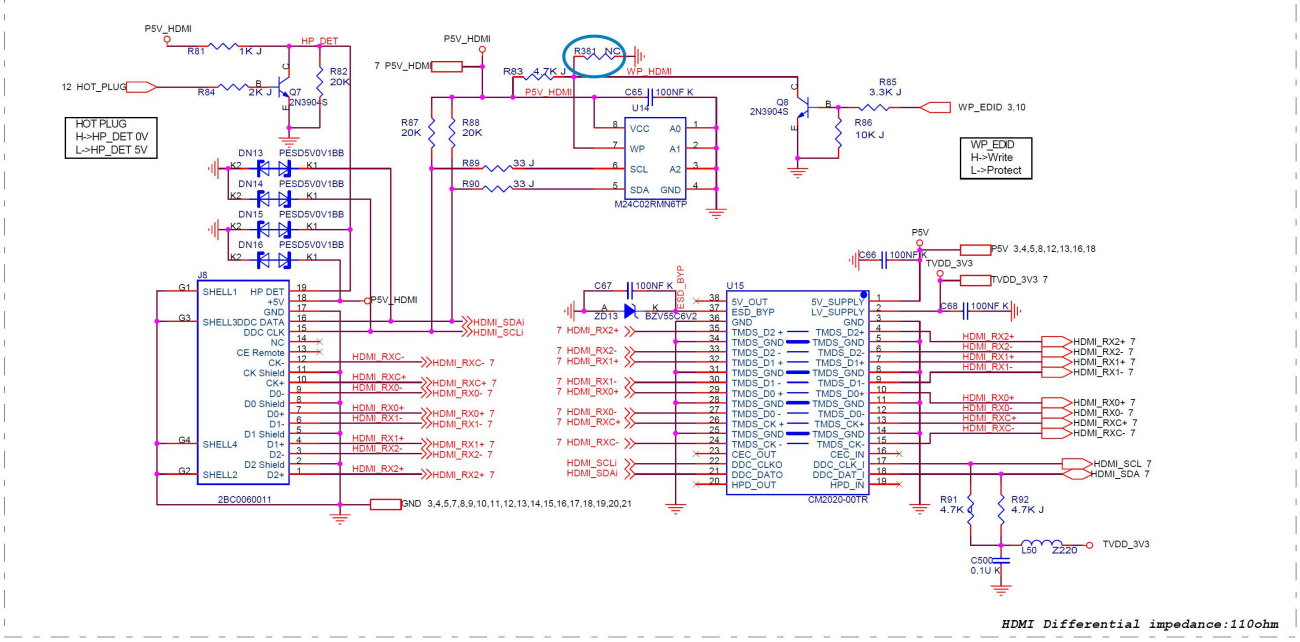

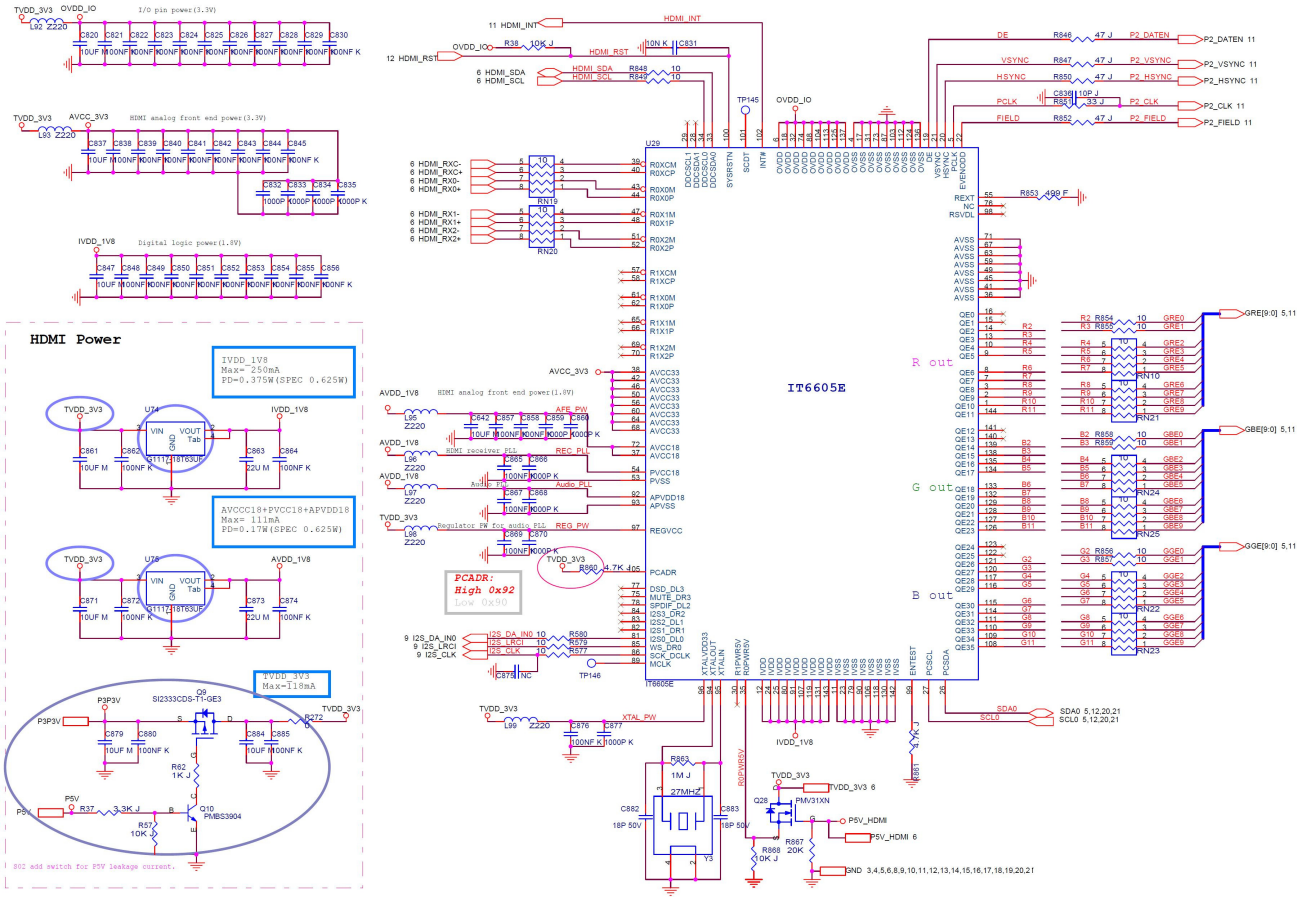

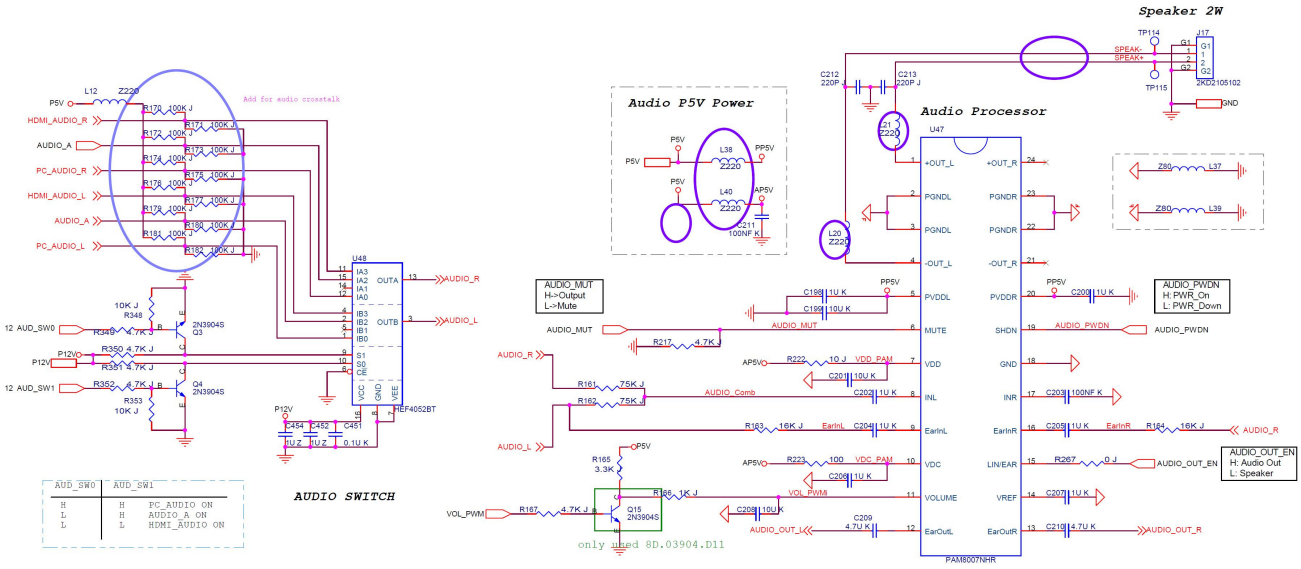
Speaker 2W
Audio Processor
Audio P5V Power
AUDIO SWITCH
AUDIO_MUT
H->Output
L->Mute
AUDIO_PWDN
H: PWR_On
L: PWR_Down
AUDIO_OUT_EN
H: Audio Out
L: Speaker
PAM8007NHR
HEF4052BT
only used 8D.03904.D11

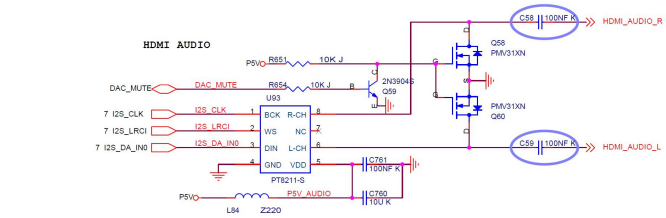
HDMI AUDIO
PT8211-S

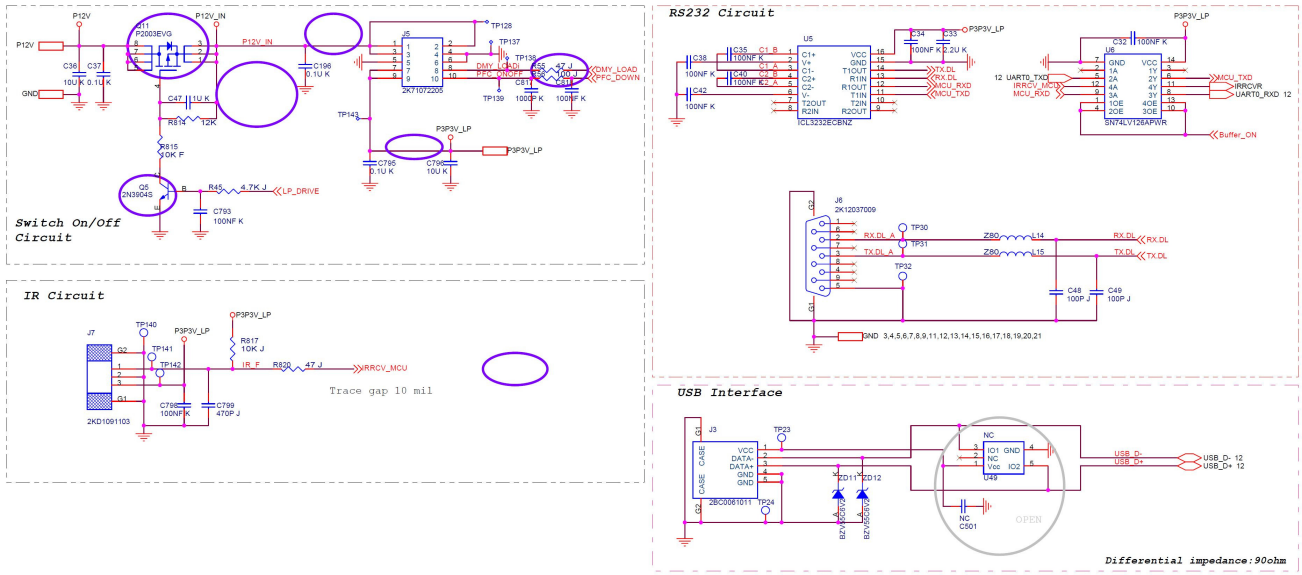
Switch On/Off Circuit
RS232 Circuit
IR Circuit
Trace gap 10 mil
USB Interface
Differential impedance:90ohm
Power Control MCU Circuit
Reserve

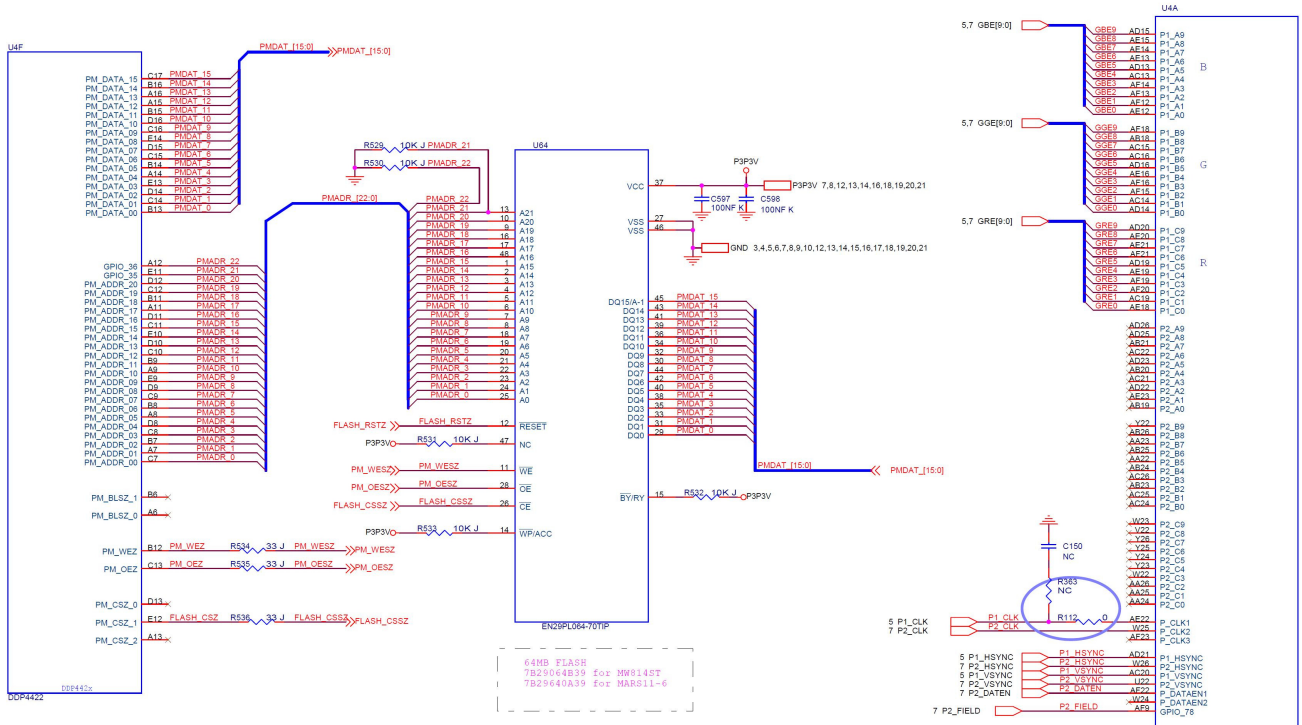
U4F
DDP4422
U64
EN29PL064-70TIP
64MB FLASH
7B29064B39 for MW814ST
7B29640A39 for MARS11-6
U4A
DDP4422
Front End Interface

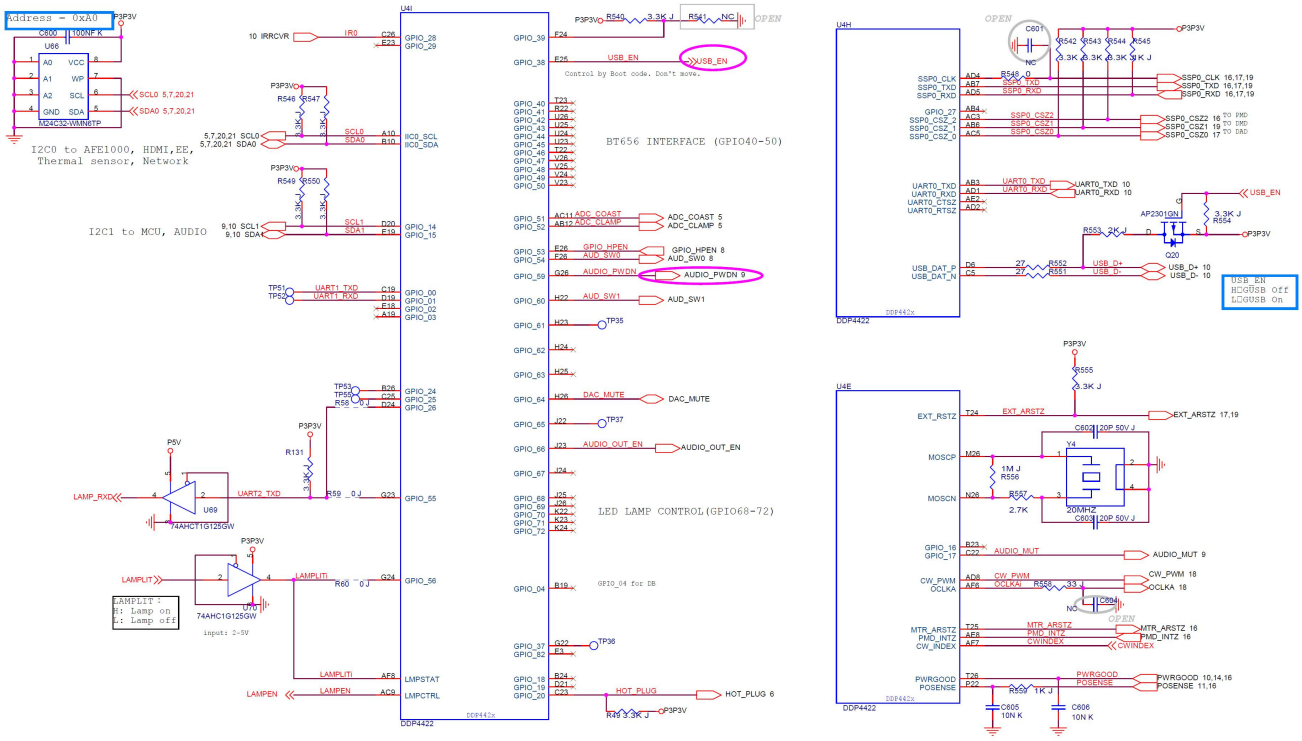
Address = 0xA0
I2C0 to AFE1000, HDMI,EE, Thermal sensor, Network
I2C1 to MCU, AUDIO
U4I
BT656 INTERFACE (GPIO40-50)
LED LAMP CONTROL(GPIO68-72)
DDP4422
U4H
DDP4422
USB_EN
HC:USB Off
LC:USB On
U4E
DDP4422

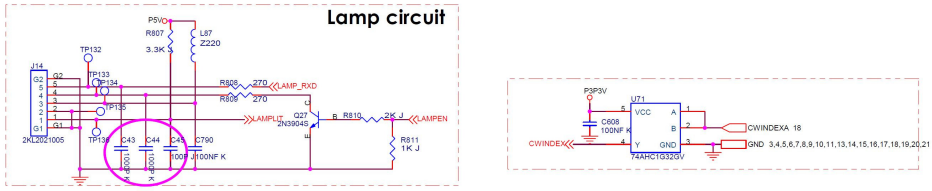
Lamp circuit
LAMPLIT :
H: Lamp on
L: Lamp off
input: 2-5V

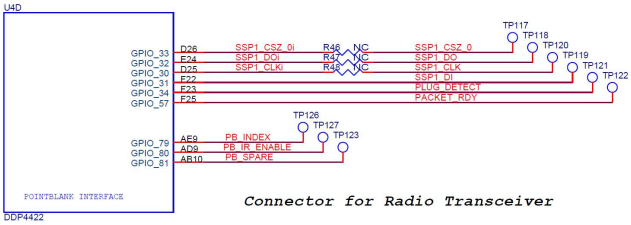

Connector for Radio Transceiver

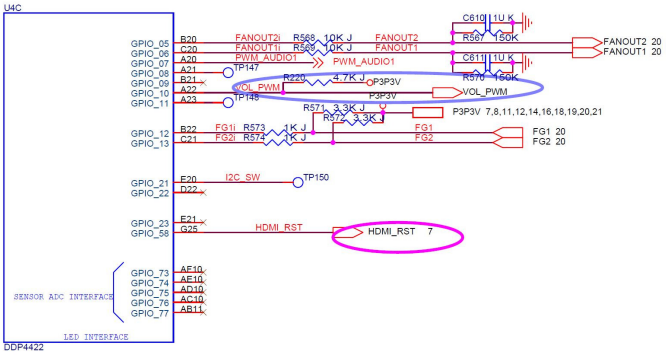

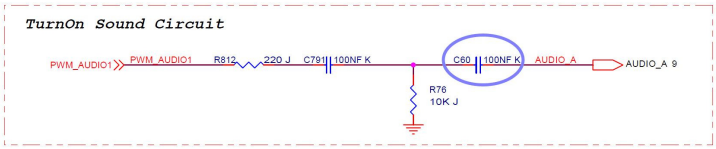

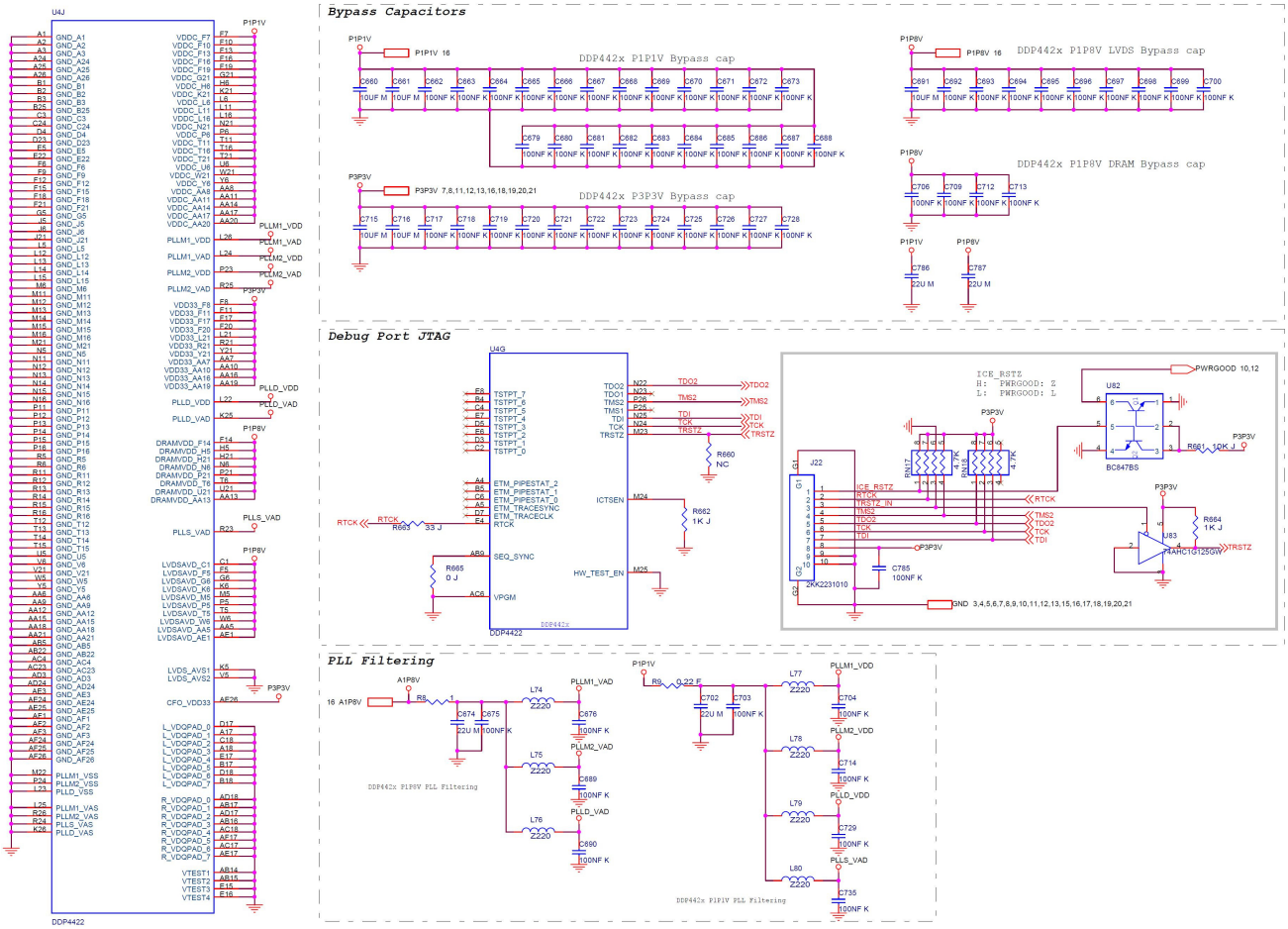

KeyPad & LED Circuit

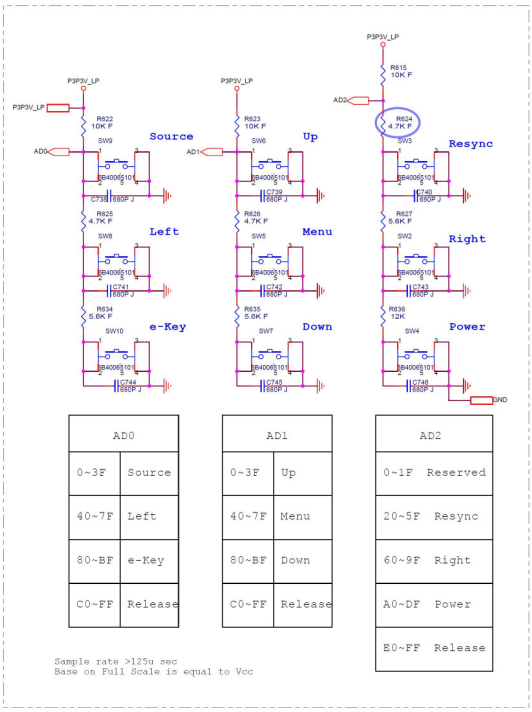

AD0	
0~3F	Source
40~7F	Left
80~BF	e-Key
C0~FF	Release

AD1	
0~3F	Up
40~7F	Menu
80~BF	Down
C0~FF	Release

AD2	
0~1F	Reserved
20~5F	Resync
60~9F	Right
A0~DF	Power
E0~FF	Release

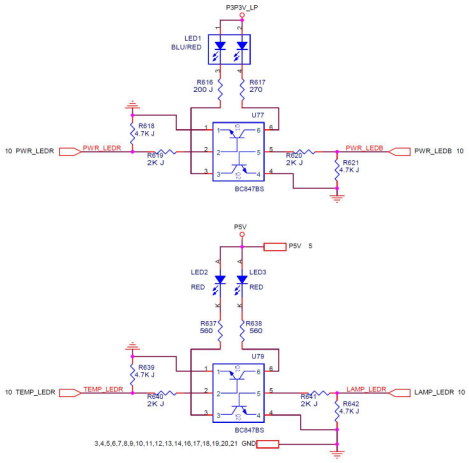

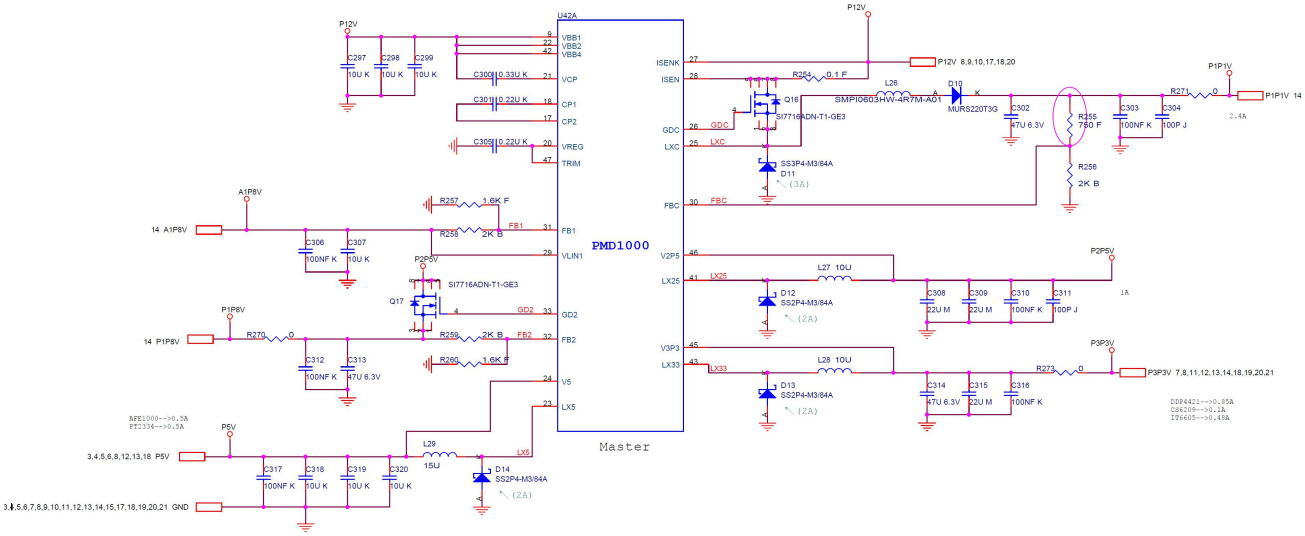

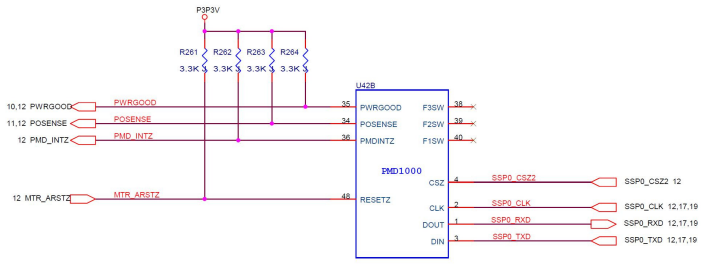

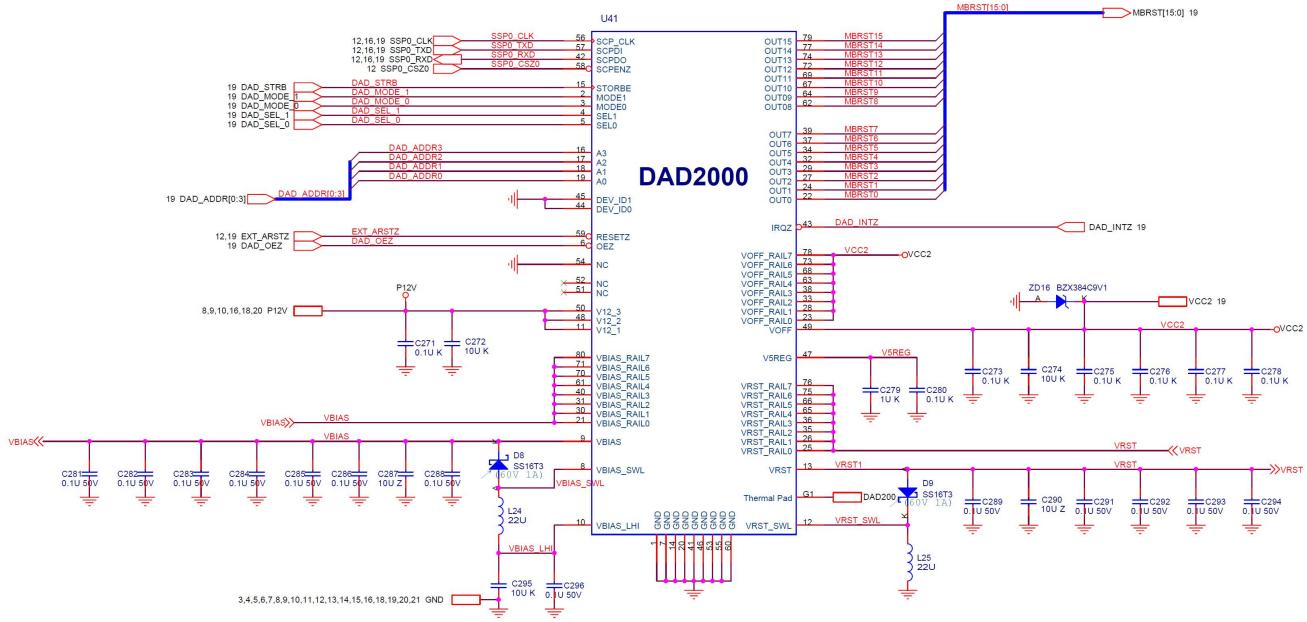

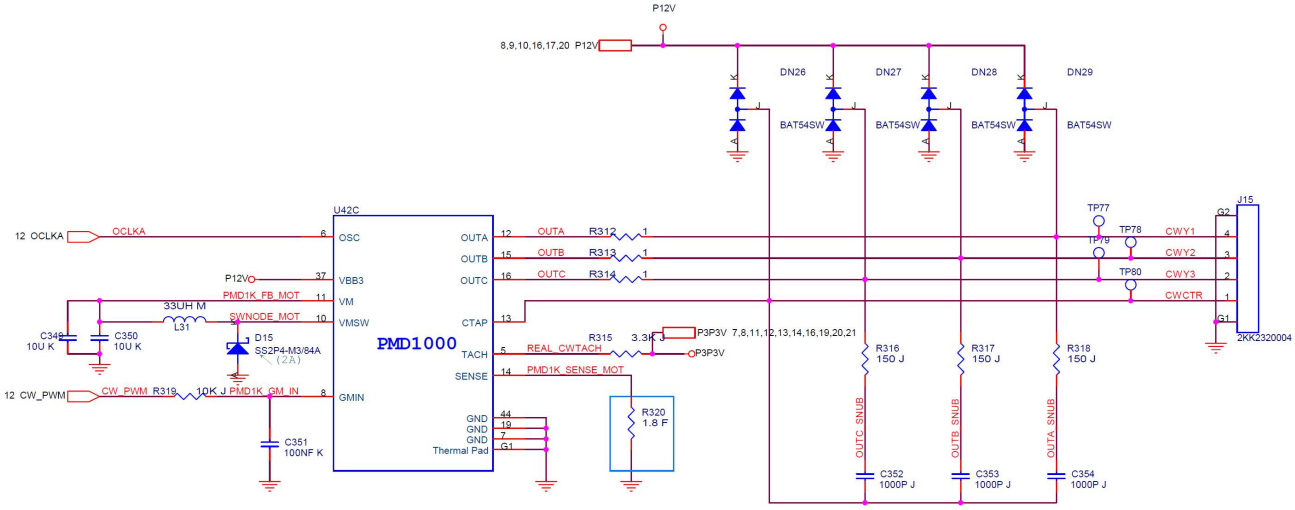

The resistor value is 0.47Ω to 2.2Ω
Voltage range for the SENSE is 100-150mV,
at least 80 mV.

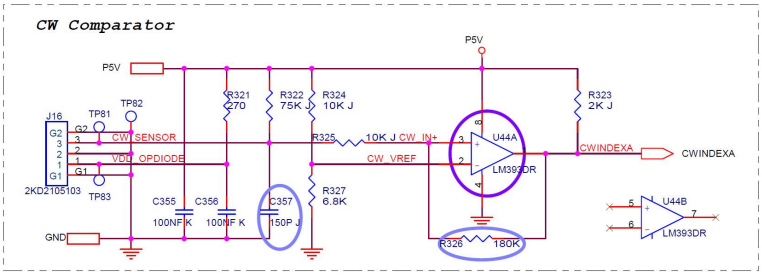

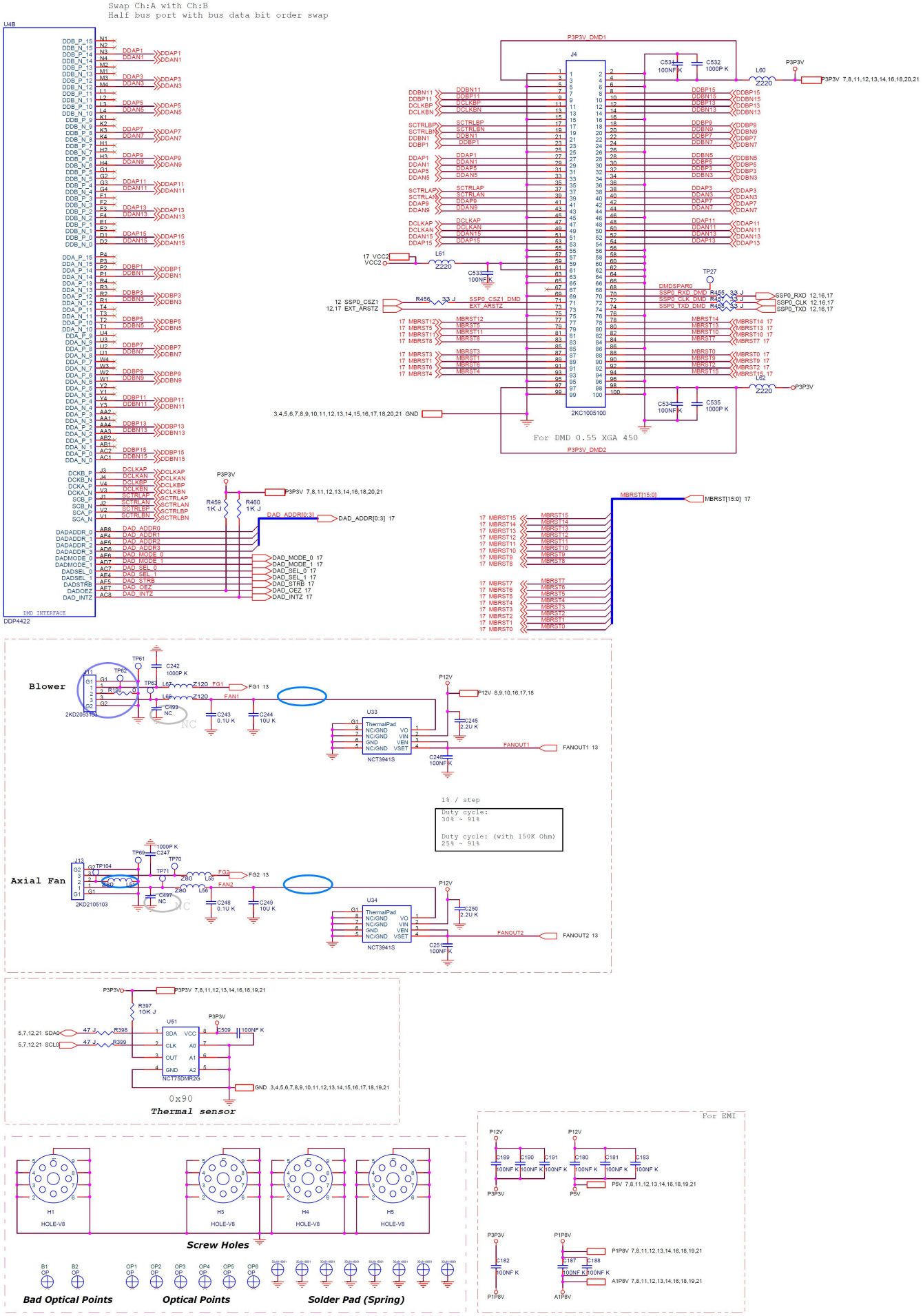
Swap Ch:A with Ch:B
Half bus port with bus data bit order swap
U4B
DDP4422
DMD INTERFACE
P3P3V_DMD1
J4
2KC1005100
For DMD 0.55 XGA 450
P3P3V_DMD2
Blower
2KD2093163
NCT3941S
1% / step
Duty cycle:
30% ~ 91%
Duty cycle: (with 150K Ohm)
25% ~ 91%
Axial Fan
2KD2105103
U51
NCT75DMR2G
0x90
Thermal sensor
For EMI
H1
HOLE-V8
Screw Holes
Bad Optical Points
Optical Points
Solder Pad (Spring)

- **H6510BD:**

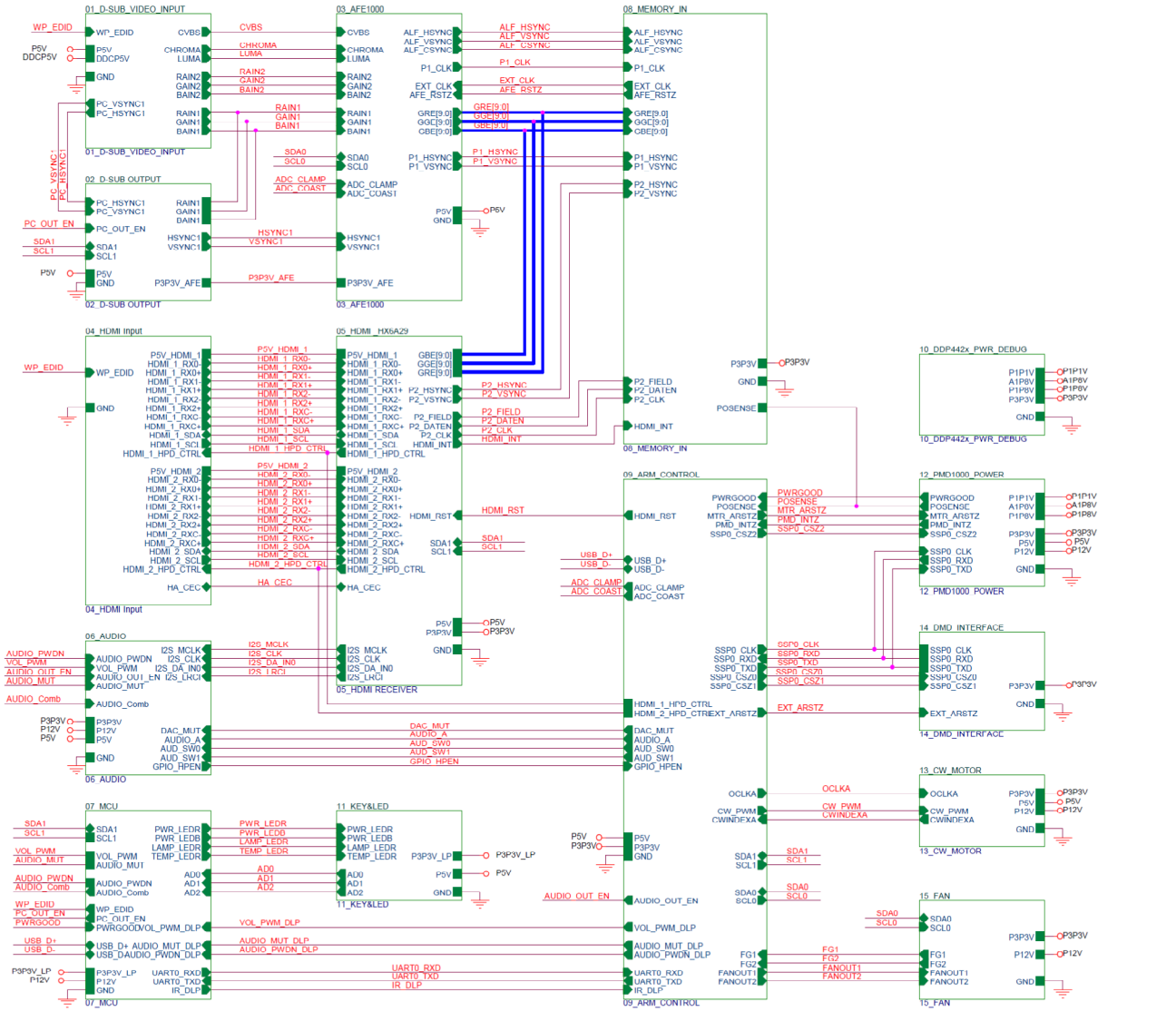
01_D-SUB_VIDEO_INPUT
02_D-SUB OUTPUT
03_AFE1000
04_HDMI Input
05_HDMI_HX6A29
05_HDMI RECEIVER
06_AUDIO
07_MCU
08_MEMORY_IN
09_ARM_CONTROL
10_DDP442x_PWR_DEBUG
11_KEY&LED
12_PMD1000_POWER
13_CW_MOTOR
14_DMD_INTERFACE
15_FAN

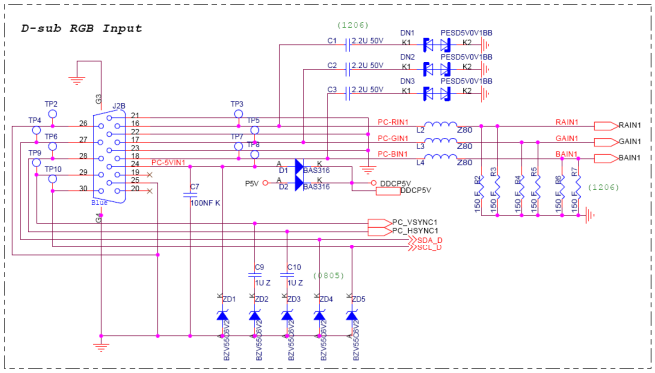
D-sub RGB Input

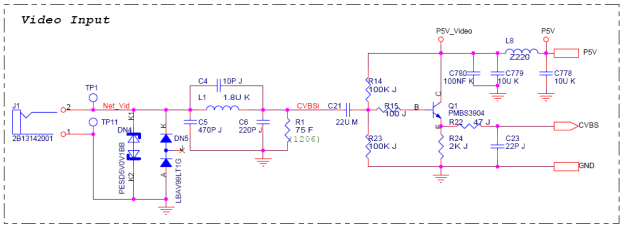
Video Input

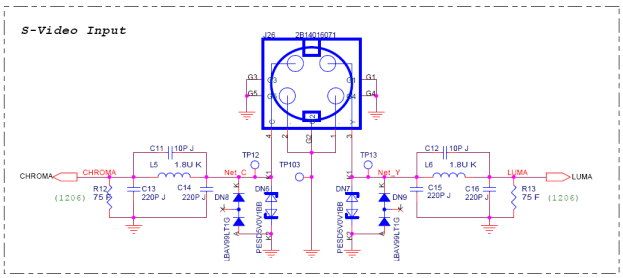
S-Video Input

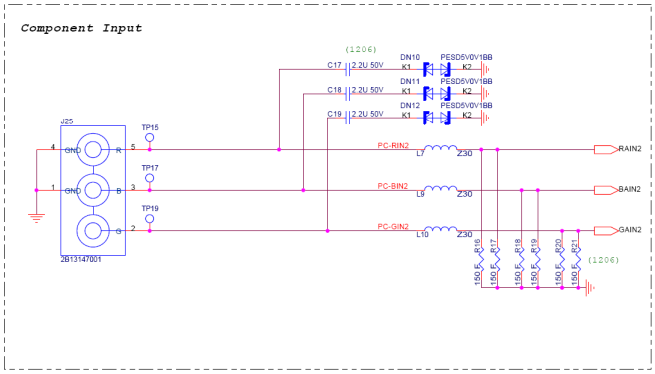
Component Input

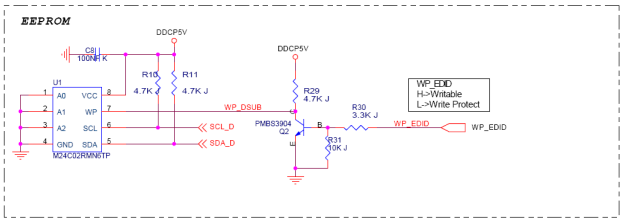
EEPROM

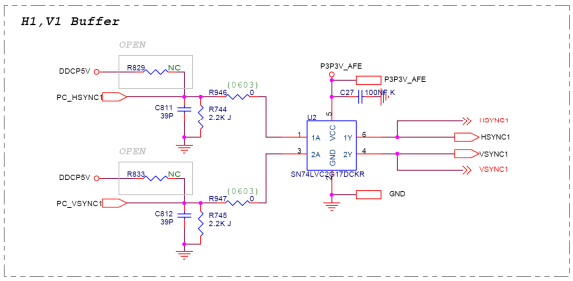
H1,V1 Buffer
OPEN
DDCP5V
PC_HSYNC1
R829
NC
R946
(0603)
C811
39P
R744
2.2K J
P3P3V_AFE
C27
100NF K
U2
SN74LVC2G17DCKR
HDYNC1
HSYNC1
VSYNC1
VSYNC1
GND
DDCP5V
PC_VSYNC1
R833
R947
C812
39P
R745
2.2K J

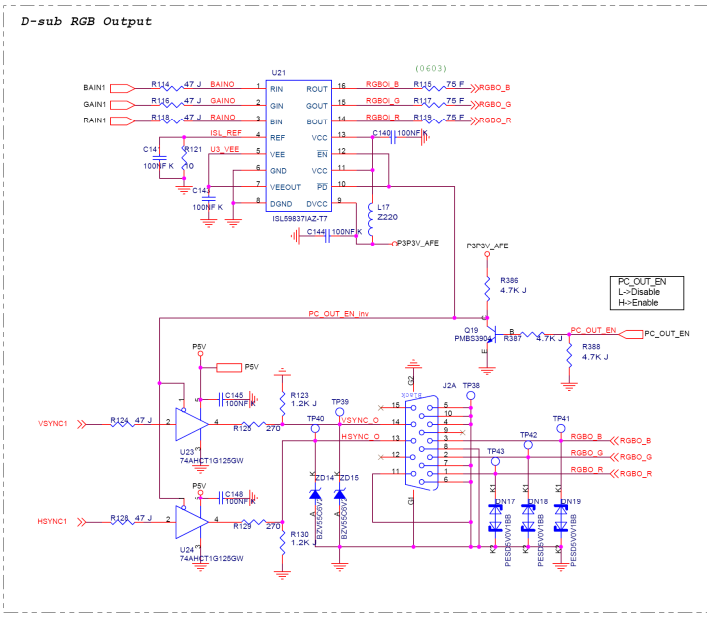
D-sub RGB Output
BAIN1
GAIN1
RAIN1
U21
ISL59837IAZ-T7
RGBO_B
RGBO_G
RGBO_R
ISL_REF
U3_VEE
L17
Z220
P3P3V_AFE
R386
4.7K J
PC_OUT_EN
L->Disable
H->Enable
PC_OUT_EN_inv
Q19
PMBS3904
R387
4.7K J
R388
4.7K J
P5V
VSYNC1
HSYNC1
U23
74AHCT1G125GW
U24
74AHCT1G125GW
VSYNC_O
HSYNC_O
ZD14
ZD15
BZX84C5V6
PESD5V0V1BB

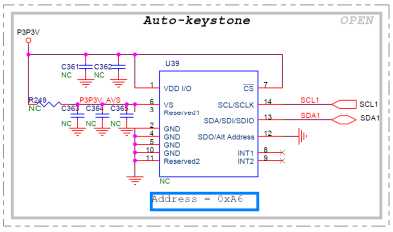
Auto-keystone
OPEN
P3P3V
U39
VDD I/O
VS
Reserved1
GND
Reserved2
SCL/SCLK
SDA/SDI/SDIO
SDO/Alt Address
INT1
INT2
SCL1
SDA1
Address = 0xA6

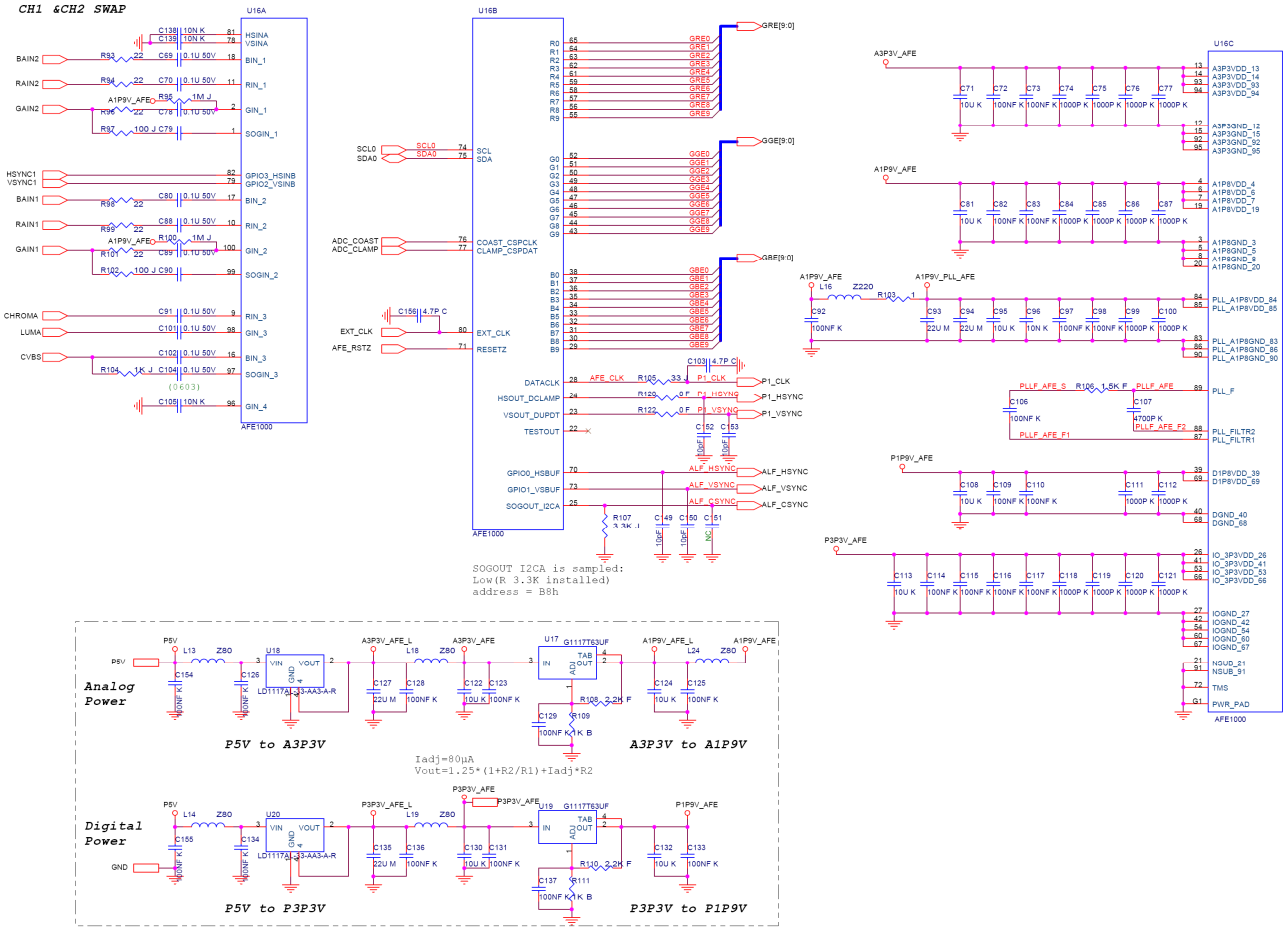
CH1 &CH2 SWAP
U16A
AFE1000
BAIN2
RAIN2
GAIN2
HSYNC1
VSYNC1
BAIN1
RAIN1
GAIN1
CHROMA
LUMA
CVBS
U16B
GRE[9:0]
GGE[9:0]
GBE[9:0]
SCL0
SDA0
ADC_COAST
ADC_CLAMP
EXT_CLK
AFE_RSTZ
DATACLK
HSOUT_DCLAMP
VSOUT_DUPOT
TESTOUT
GPIO0_HSBUF
GPIO1_VSBUF
SOGOUT_I2CA
ALF_HSYNC
ALF_VSYNC
ALF_CSYNC
SOGOUT I2CA is sampled:
Low(R 3.3K installed)
address = B8h
U16C
A3P3V_AFE
A1P9V_AFE
A1P9V_PLL_AFE
P1P9V_AFE
P3P3V_AFE
PLL_F
PLL_FILTR2
PLL_FILTR1
TMS
PWR_PAD
Analog Power
P5V to A3P3V
A3P3V to A1P9V
Iadj=80μA
Vout=1.25*(1+R2/R1)+Iadj*R2
Digital Power
P5V to P3P3V
P3P3V to P1P9V

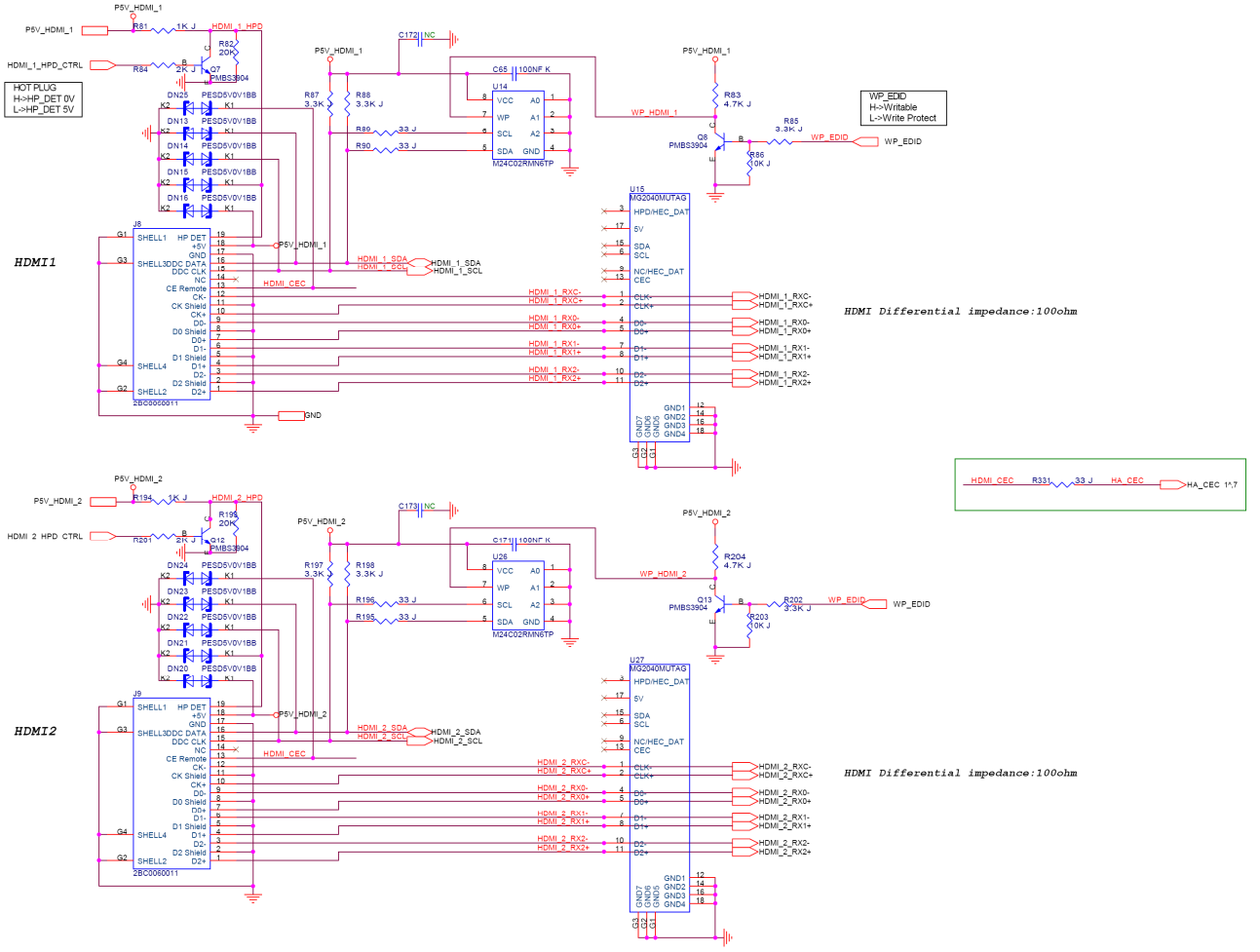
HDMI1
HOT PLUG
H->HP_DET 0V
L->HP_DET 5V
WP_EDID
H->Writable
L->Write Protect
HDMI Differential impedance:100ohm
HDMI_CEC
HDMI_CEC R331 33 J HA_CEC
HA_CEC 1^7
HDMI2
HDMI Differential impedance:100ohm

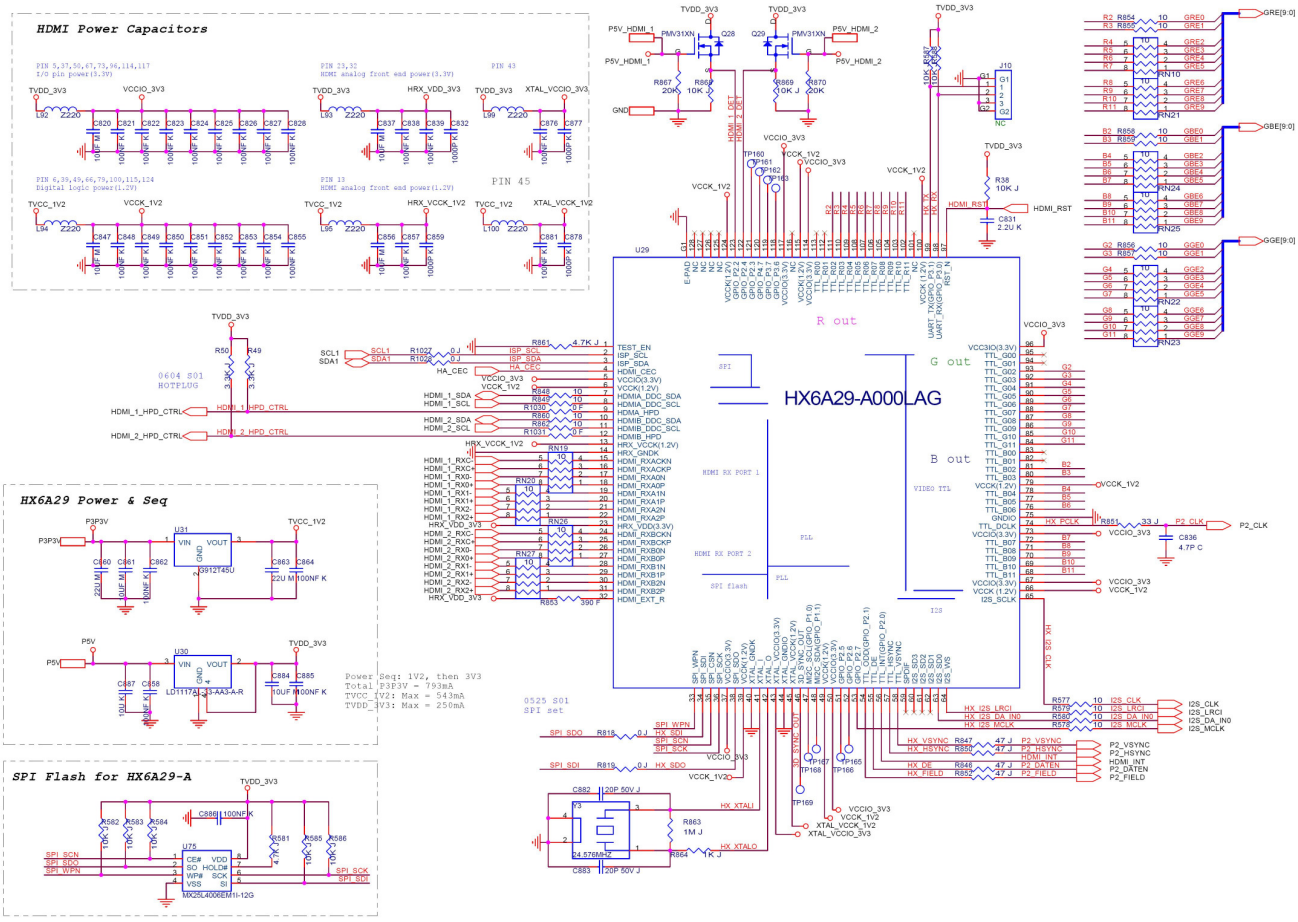
HDMI Power Capacitors
HX6A29 Power & Seq
Power Seq: 1V2, then 3V3
Total P3P3V = 793mA
TVCC_1V2: Max = 543mA
TVDD_3V3: Max = 250mA
SPI Flash for HX6A29-A
HX6A29-A000LAG
R out
G out
B out

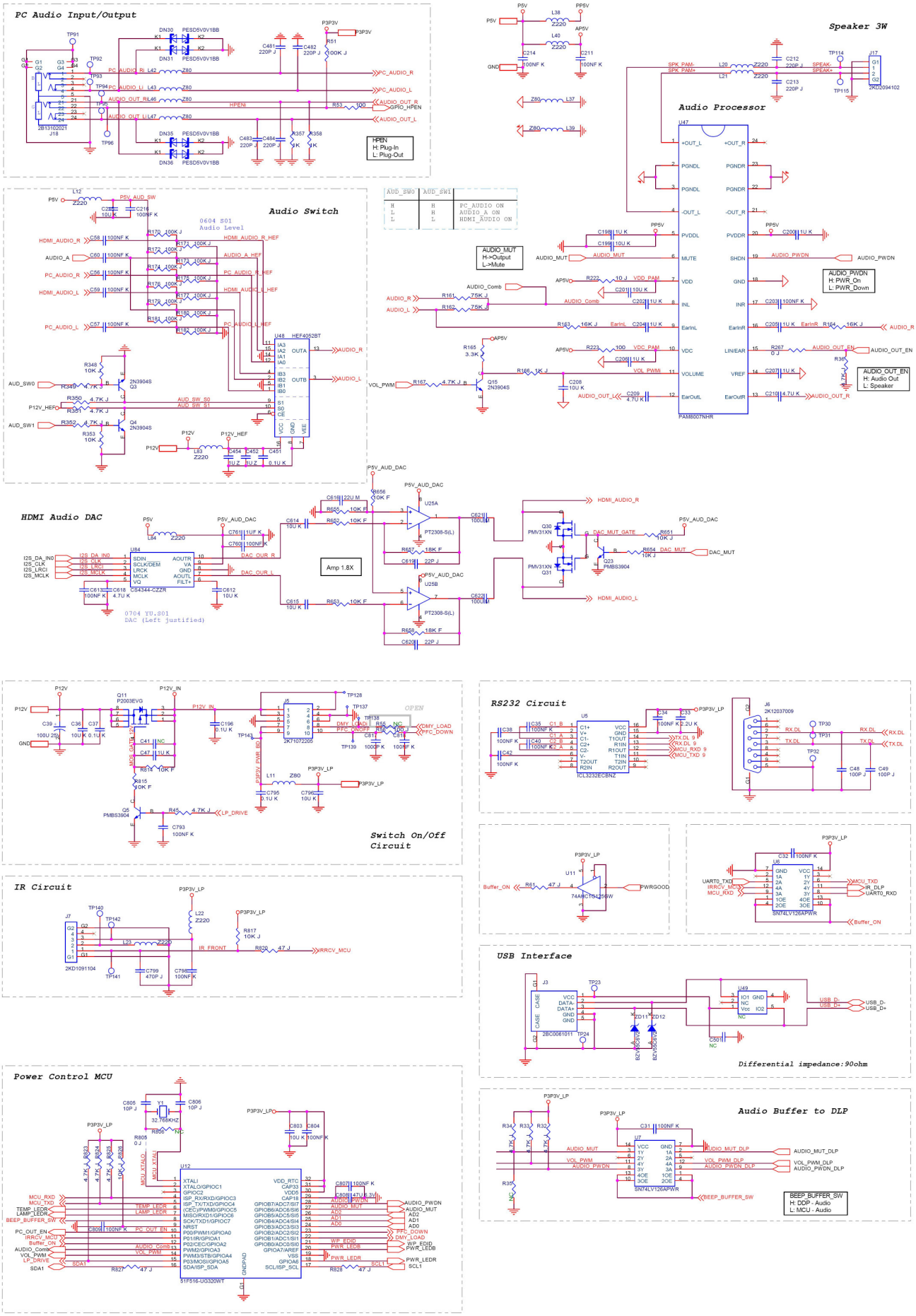
PC Audio Input/Output
Speaker 3W
Audio Processor
Audio Switch
HDMI Audio DAC
RS232 Circuit
Switch On/Off Circuit
IR Circuit
USB Interface
Differential impedance:90ohm
Power Control MCU
Audio Buffer to DLP
HPEN
H: Plug-In
L: Plug-Out
AUDIO_MUT
H->Output
L->Mute
AUDIO_PWDN
H: PWR_On
L: PWR_Down
AUDIO_OUT_EN
H: Audio Out
L: Speaker
BEEP_BUFFER_SW
H: DDP - Audio
L: MCU - Audio
Amp 1.8X
0604 S01
Audio Level
0704 YU.S01
DAC (Left justified)
OPEN

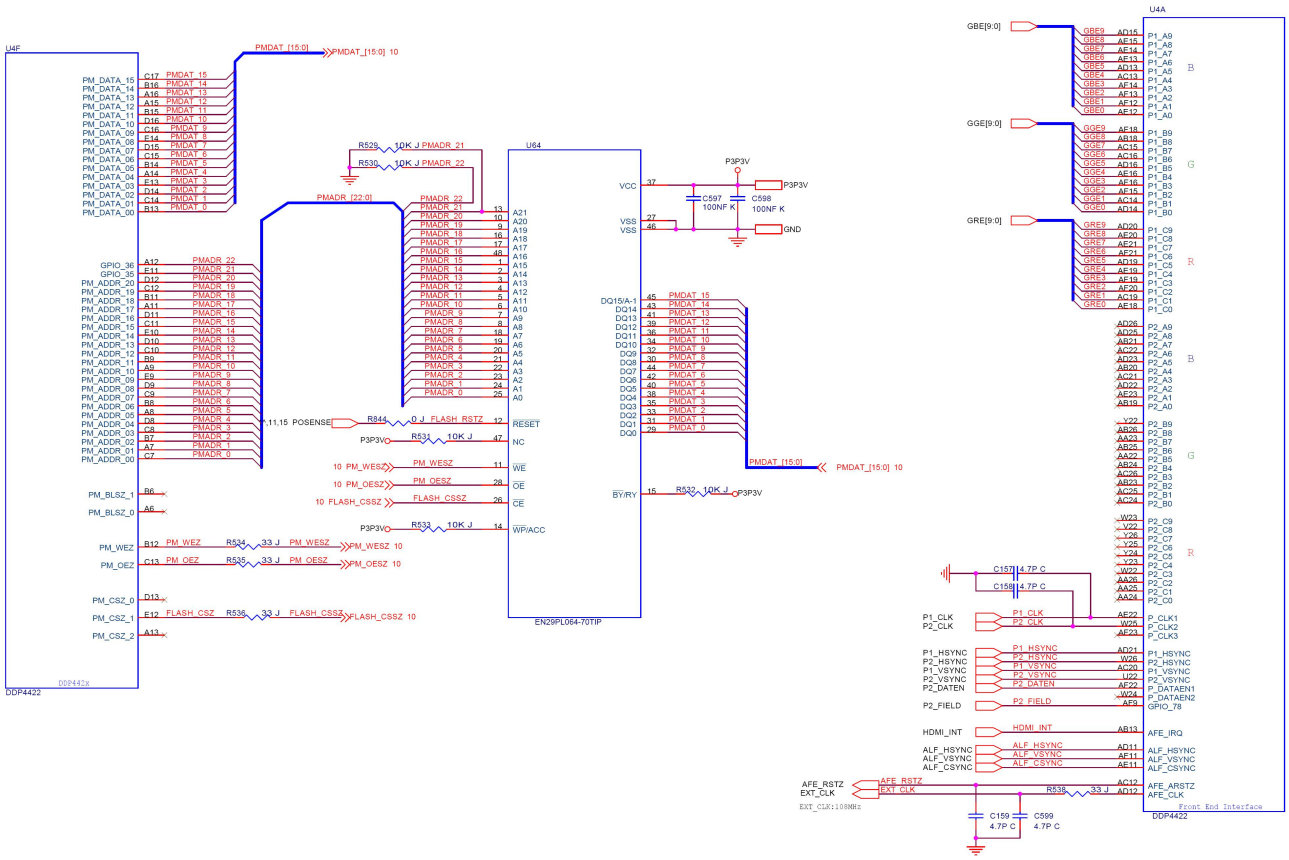
U4F
DDP4422
U64
EN29PL064-70TIP
U4A
DDP4422
Front End Interface

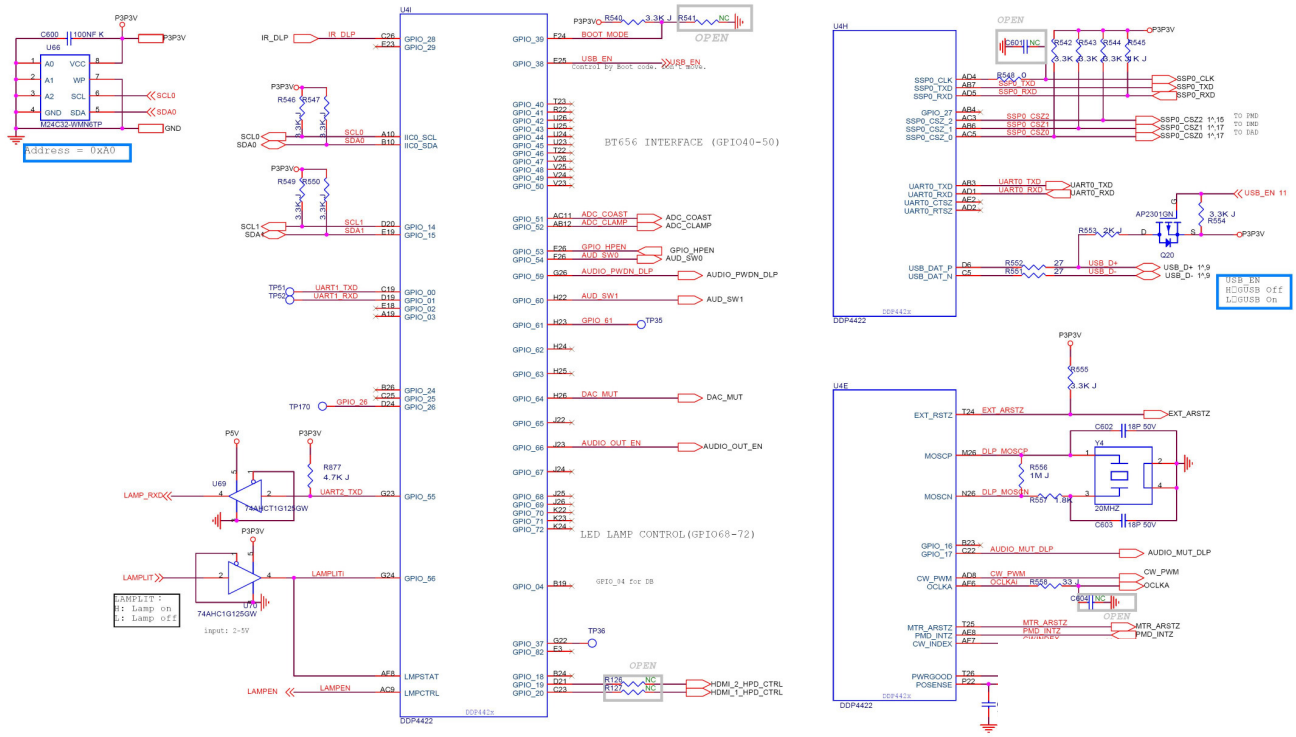
U66
M24C32-WMN6TP
Address = 0xA0
U4I
DDP4422
BT656 INTERFACE (GPIO40-50)
LED LAMP CONTROL(GPIO68-72)
U69
74AHCT1G125GW
U70
74AHC1G125GW
LAMPLIT :
H: Lamp on
L: Lamp off
input: 2~5V
U4H
DDP4422
USB_EN
H□USB Off
L□USB On
U4E
DDP4422

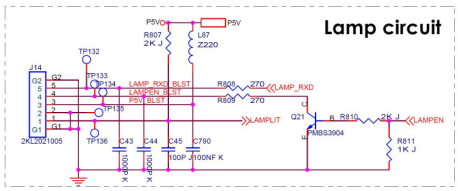
Lamp circuit
J14
2KL202T005
Q21
FMBS3904

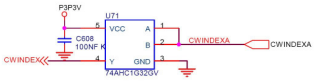
U71
74AHC1G32GV

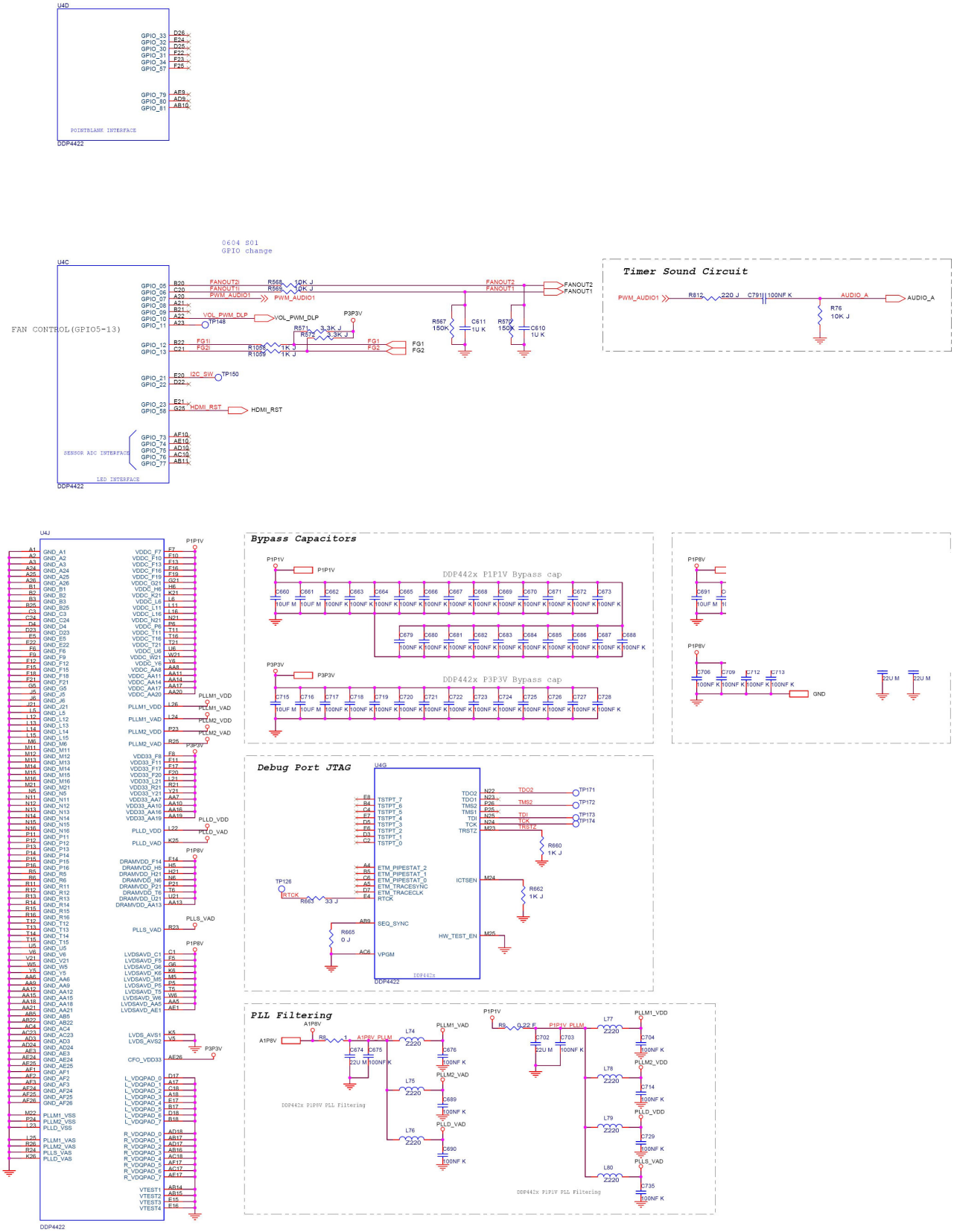
U4D
POINTBLANK INTERFACE
DDP4422
0604 S01
GPIO change
U4C
FAN CONTROL(GPIO5-13)
SENSOR ADC INTERFACE
LED INTERFACE
DDP4422
Timer Sound Circuit
PWM_AUDIO1
AUDIO_A
U4J
Bypass Capacitors
DDP442x P1P1V Bypass cap
DDP442x P3P3V Bypass cap
Debug Port JTAG
U4G
DDP4422
PLL Filtering
DDP442x P1P8V PLL Filtering
DDP442x P1P1V PLL Filtering
DDP4422

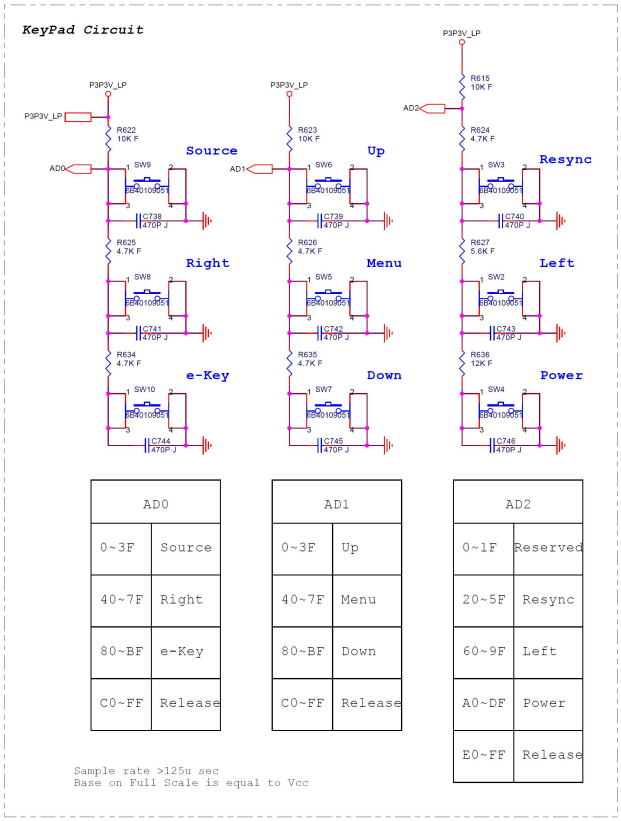

AD0	
0~3F	Source
40~7F	Right
80~BF	e-Key
C0~FF	Release

AD1	
0~3F	Up
40~7F	Menu
80~BF	Down
C0~FF	Release

AD2	
0~1F	Reserved
20~5F	Resync
60~9F	Left
A0~DF	Power
E0~FF	Release

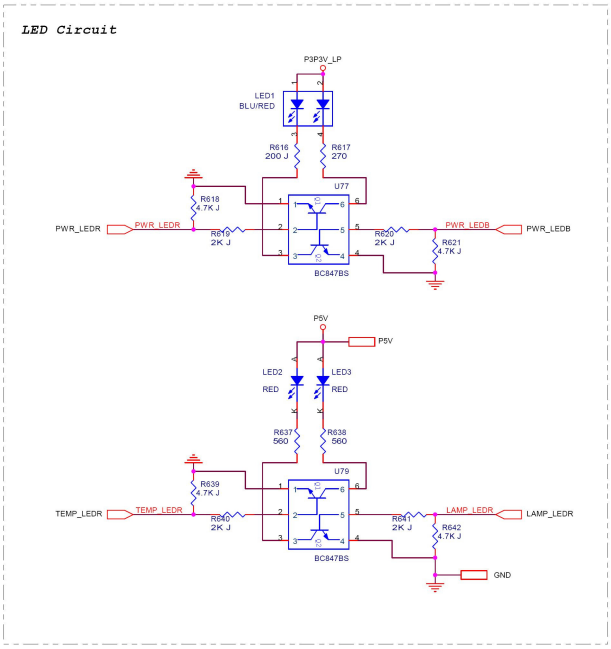

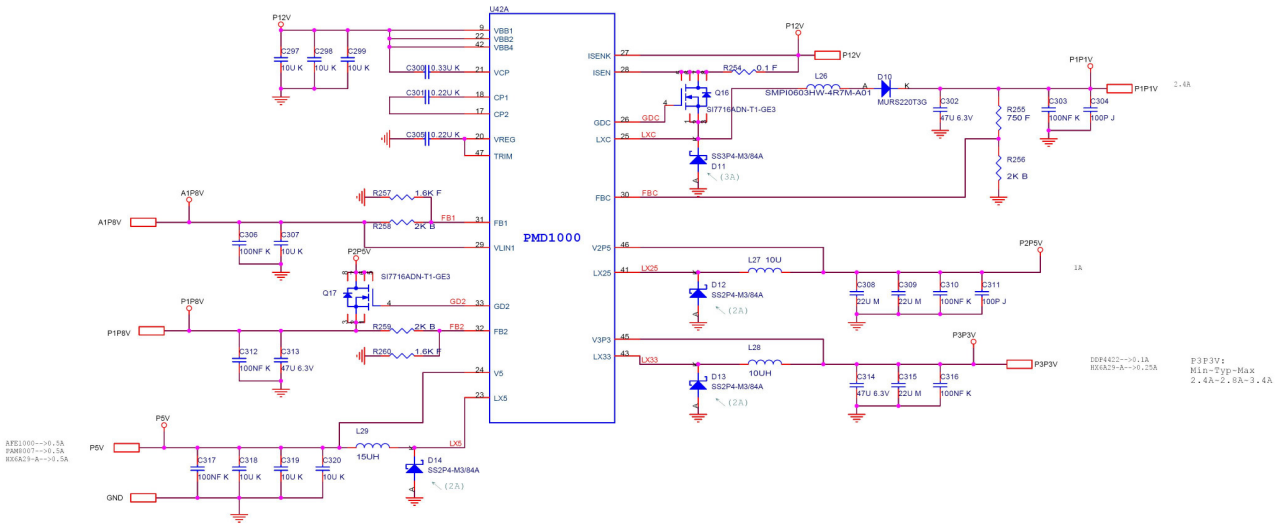

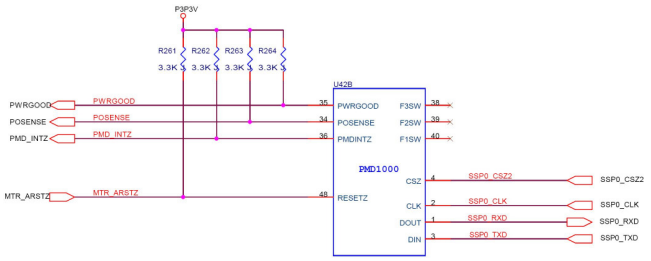

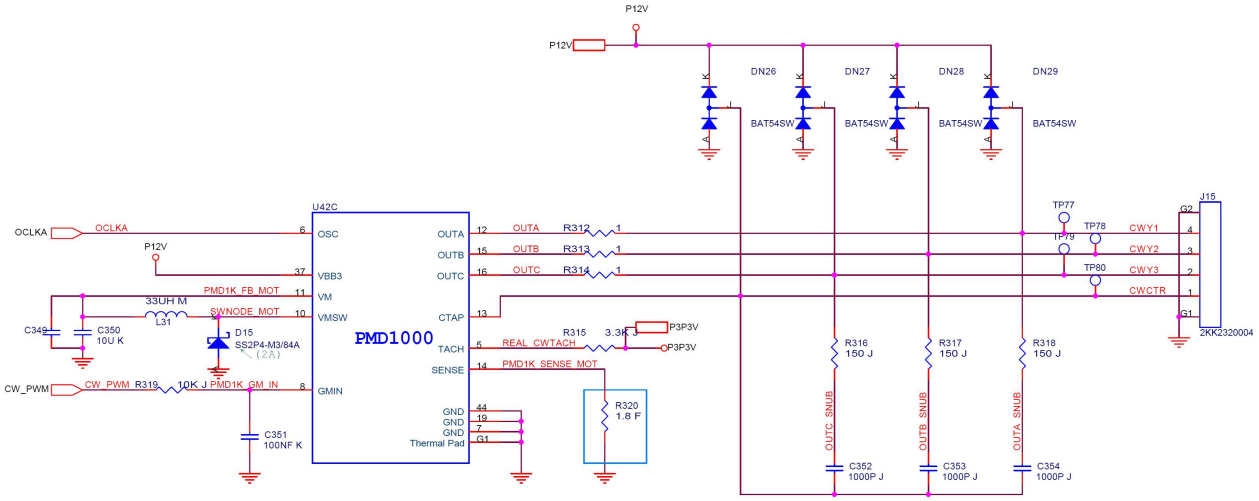

The resistor value is 0.47Ω to 2.2Ω
Voltage range for the SENSE is 100-150mV,
at least 80 mV.

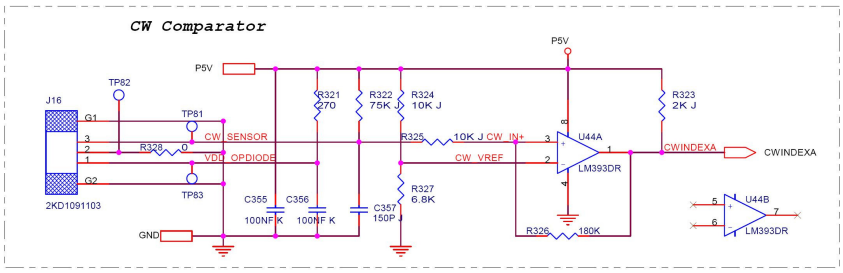

Swap Ch:A with Ch:B
Half bus port with bus data bit order swap

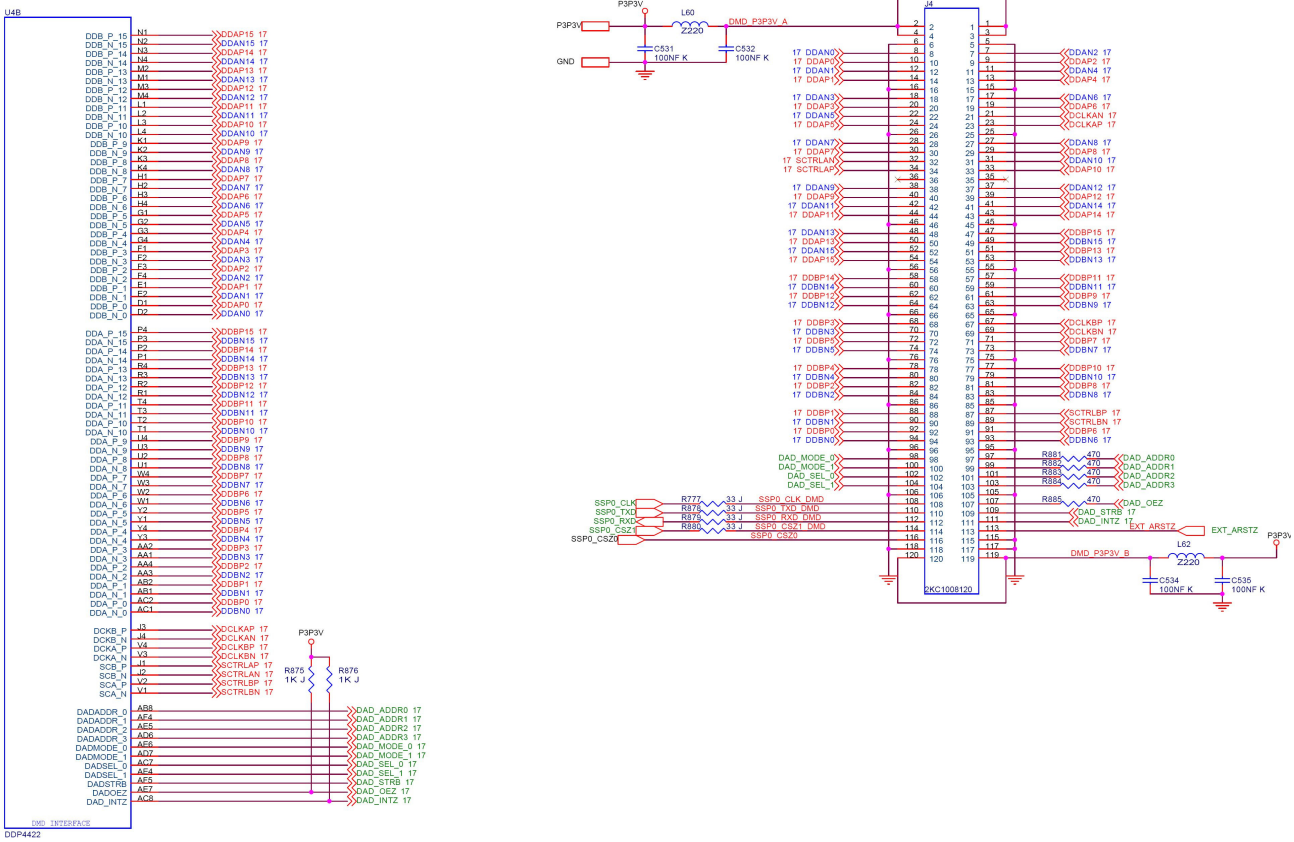

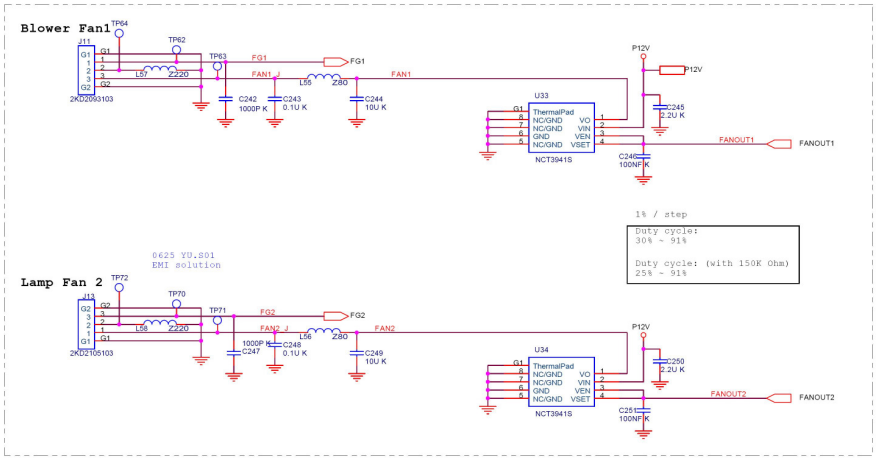
Blower Fan1
J11
2KD2093103
TP64
TP62
TP63
FG1
FAN1_J
L57
Z220
L55
280
FAN1
C242
1000P K
C243
0.1U K
C244
10U K
U33
ThermalPad
NC/GND
NC/GND
GND
NC/GND
VC
VIN
VEN
VSET
NCT3941S
P12V
C245
2.2U K
C246
100NF K
FANOUT1
1% / step
Duty cycle:
30% ~ 91%
Duty cycle: (with 150K Ohm)
25% ~ 91%
0625 YU.S01
EMI solution
Lamp Fan 2
J12
2KD2105103
TP72
TP70
TP71
FG2
FAN2_J
L58
Z220
L56
280
FAN2
1000P K
C247
C248
0.1U K
C249
10U K
U34
C250
2.2U K
C251
100NF K
FANOUT2

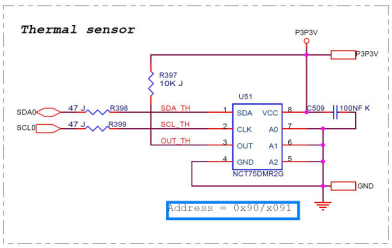
Thermal sensor
P3P3V
R397
10K J
SDA0
SCL0
47 J
R398
R399
SDA_TH
SCL_TH
OUT_TH
U51
SDA
CLK
OUT
GND
VCC
A0
A1
A2
NCT75DMR2G
C509
100NF K
GND
Address = 0x90/x091

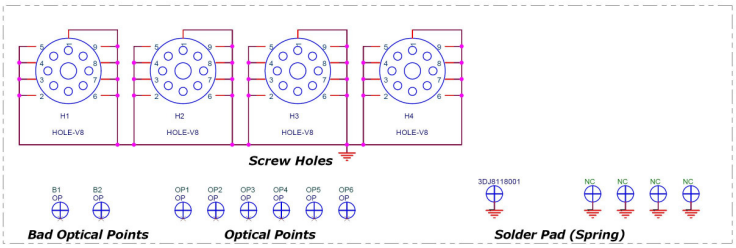
H1
HOLE-V8
H2
HOLE-V8
H3
HOLE-V8
H4
HOLE-V8
Screw Holes
B1
OP
B2
OP
Bad Optical Points
OP1
OP2
OP3
OP4
OP5
OP6
Optical Points
3DJB118001
NC
Solder Pad (Spring)

Power Board:

- **X1140A/X1240/X1140/P1340W/X1340WH:**

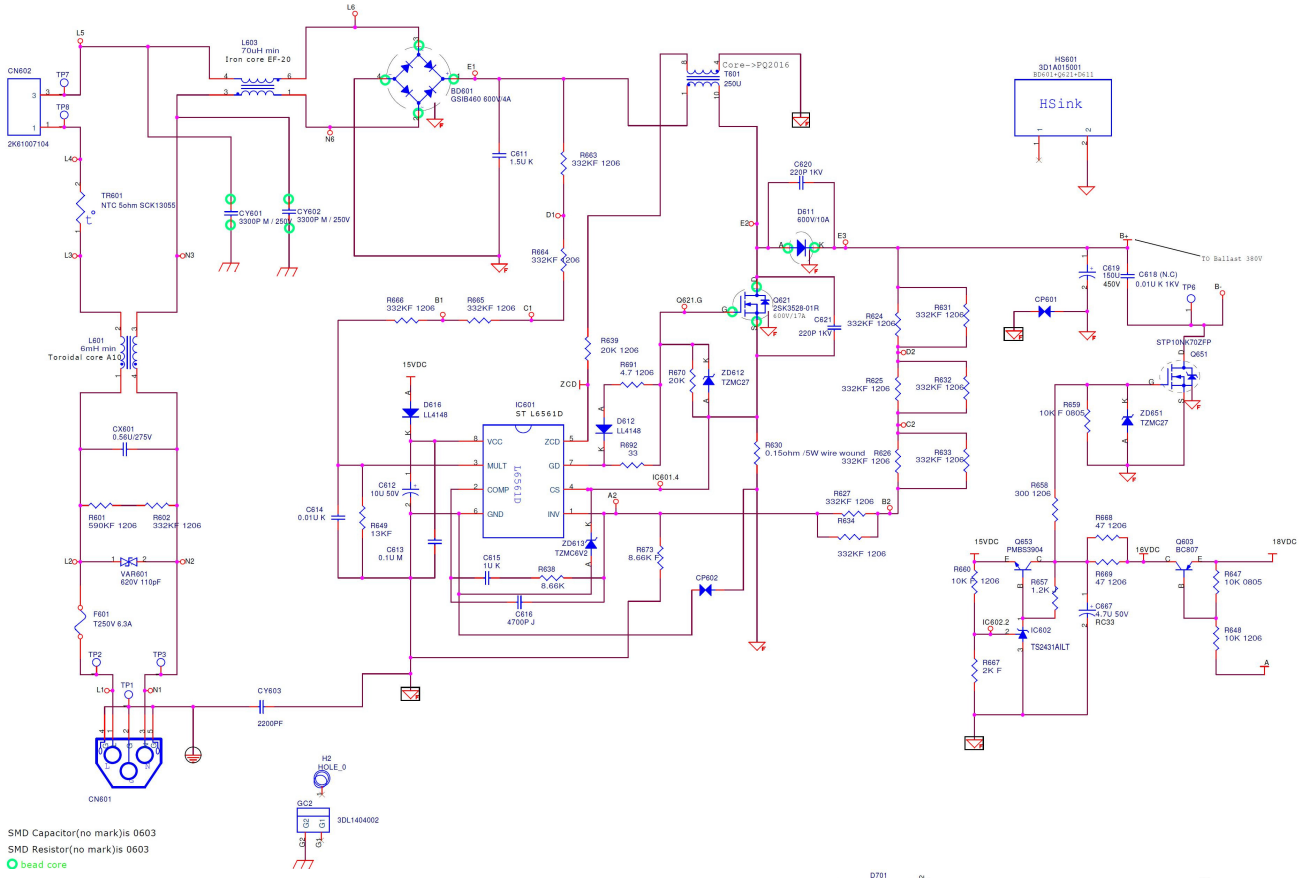

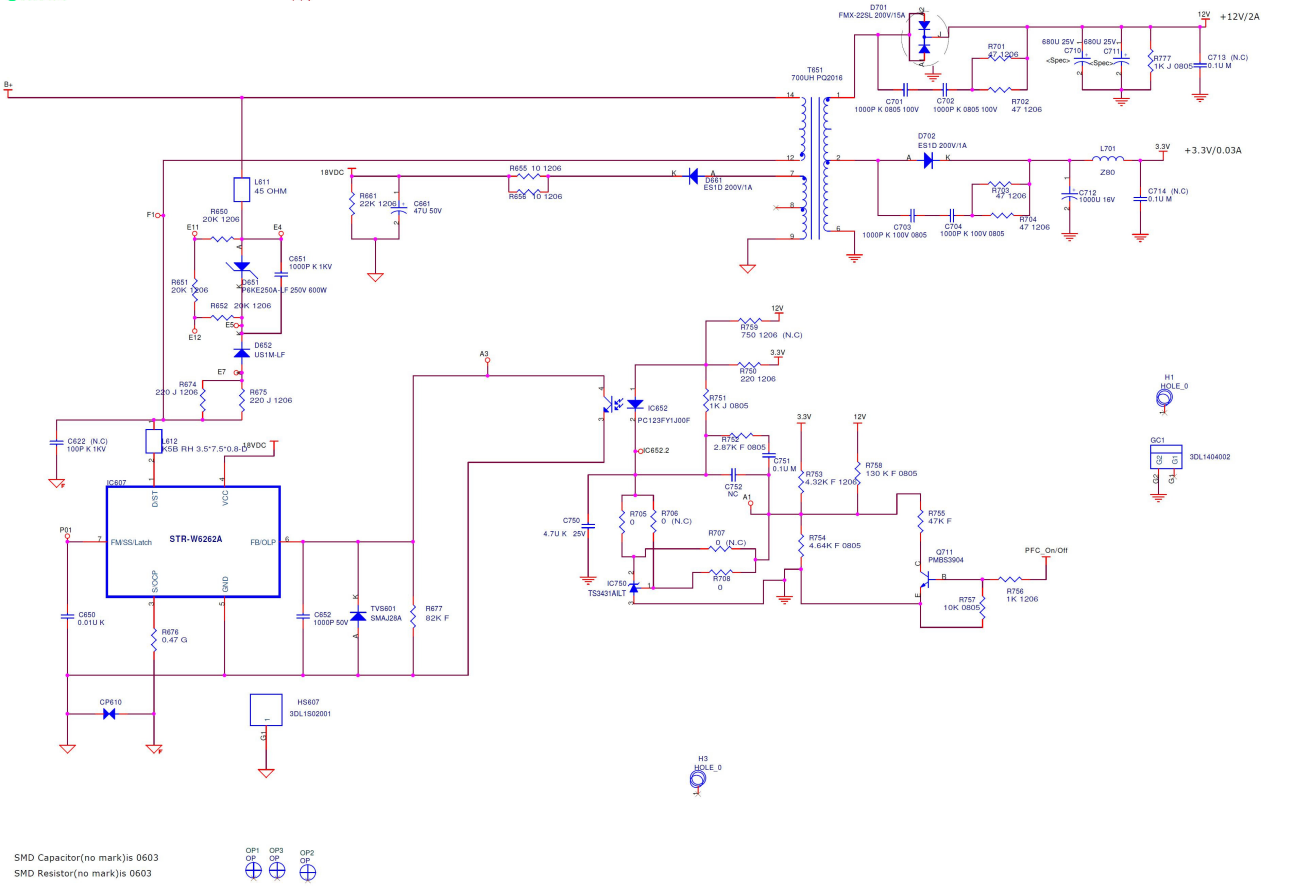

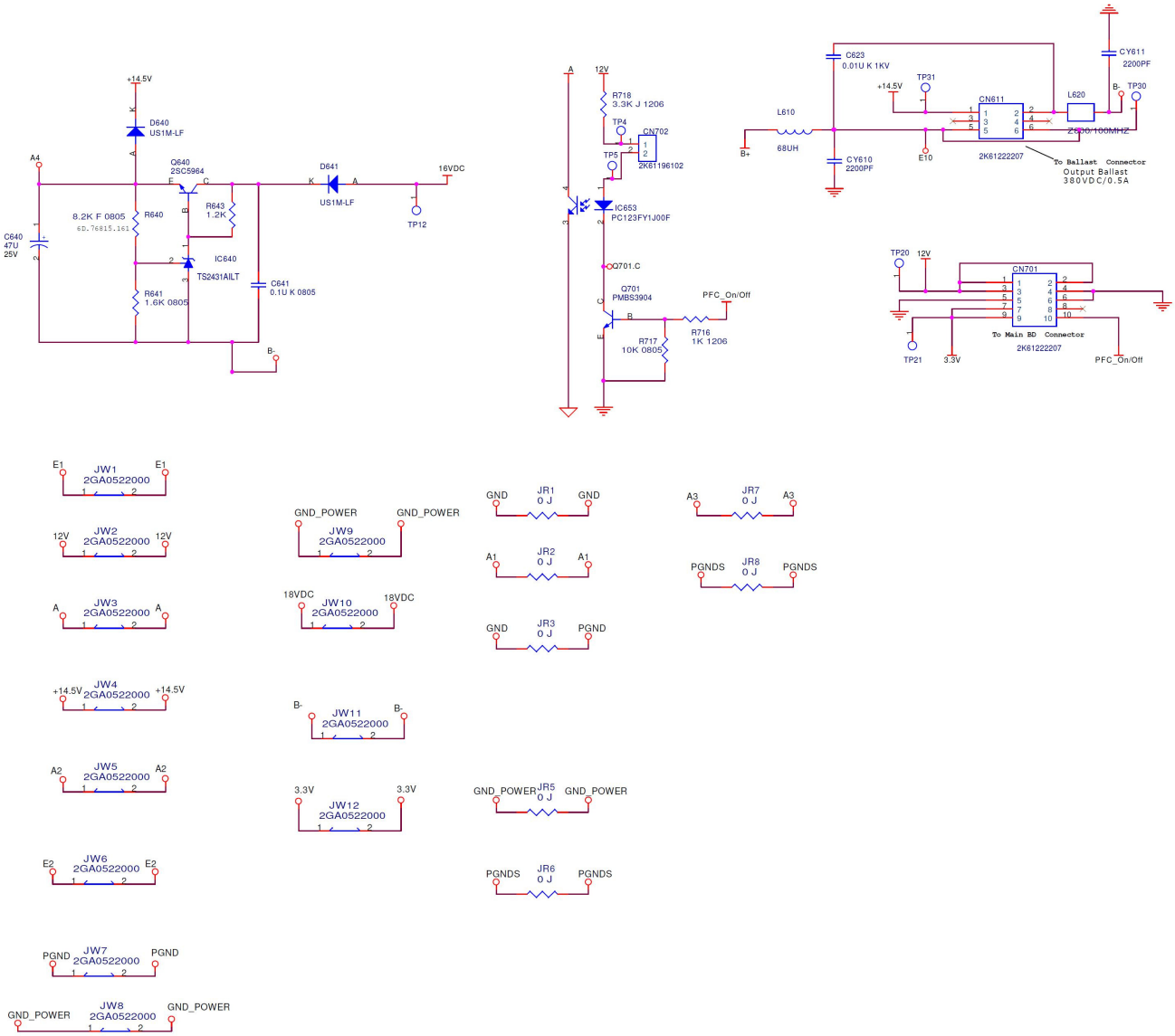
+14.5V
D640
US1M-LF
A4
Q640
2SC5964
D641
US1M-LF
16VDC
TP12
8.2K F 0805
6D.76815.161
R640
R643
1.2K
C640
47U
25V
IC640
TS2431AILT
C641
0.1U K 0805
R641
1.6K 0805
B-
A
12V
R718
3.3K J 1206
TP4
CN702
2K61196102
TP5
IC653
PC123FY1J00F
Q701.C
Q701
PMBS3904
PFC_On/Off
R717
10K 0805
R716
1K 1206
C623
0.01U K 1KV
TP31
+14.5V
CN611
L620
CY611
2200PF
B-
TP30
L610
68UH
B+
CY610
2200PF
E10
2K61222207
Z200/100MHZ
To Ballast Connector
Output Ballast
380VDC/0.5A
TP20
12V
CN701
To Main BD Connector
2K61222207
TP21
3.3V
PFC_On/Off
JW1
2GA0522000
E1
JW2
2GA0522000
12V
JW3
2GA0522000
A
JW4
2GA0522000
+14.5V
JW5
2GA0522000
A2
JW6
2GA0522000
E2
JW7
2GA0522000
PGND
JW8
2GA0522000
GND_POWER
JW9
2GA0522000
GND_POWER
JW10
2GA0522000
18VDC
JW11
2GA0522000
B-
JW12
2GA0522000
3.3V
JR1
0 J
GND
JR2
0 J
A1
JR3
0 J
PGND
JR5
0 J
GND_POWER
JR6
0 J
PGNDS
JR7
0 J
A3
JR8
0 J
PGNDS

- **H6510BD:**

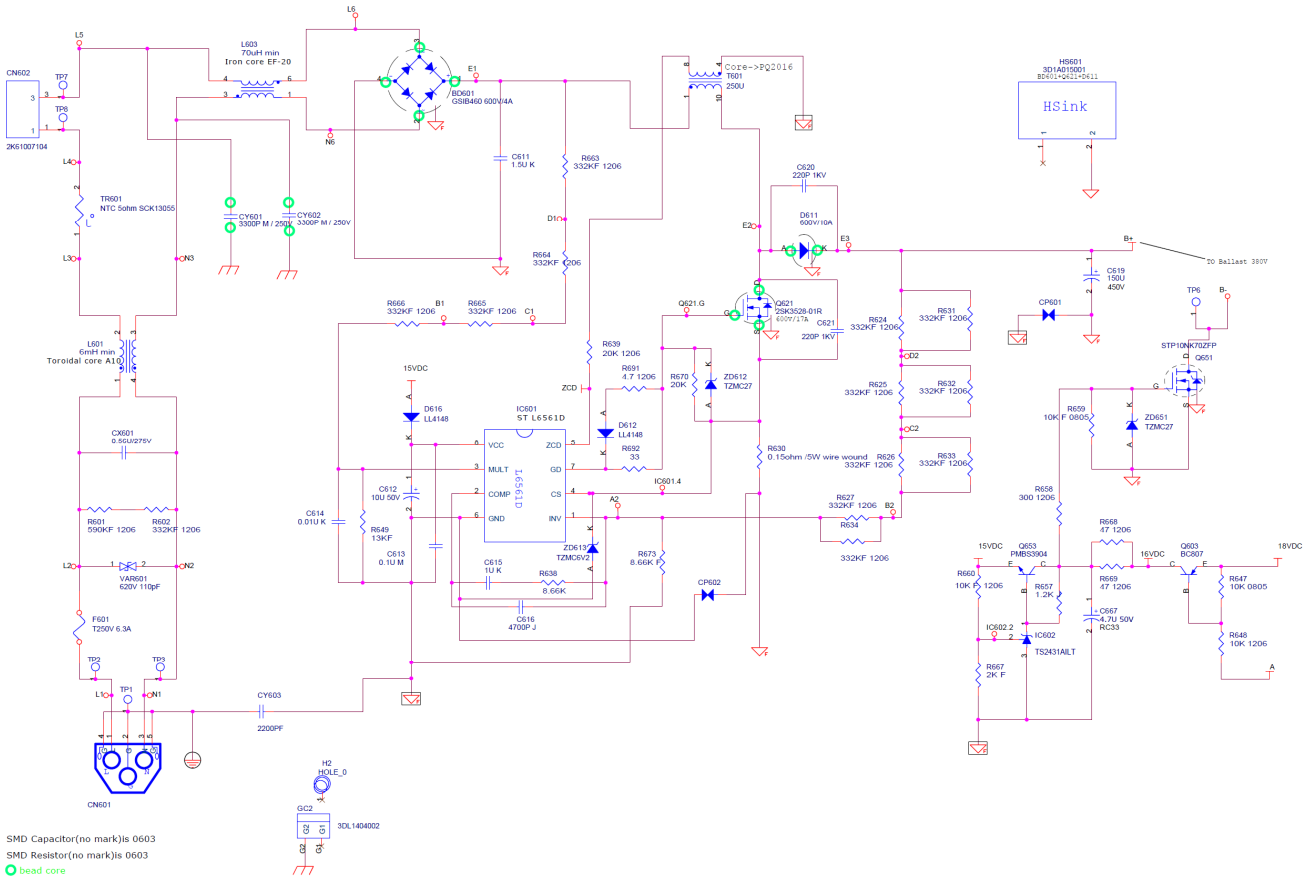
SMD Capacitor(no mark)is 0603
SMD Resistor(no mark)is 0603
bead core

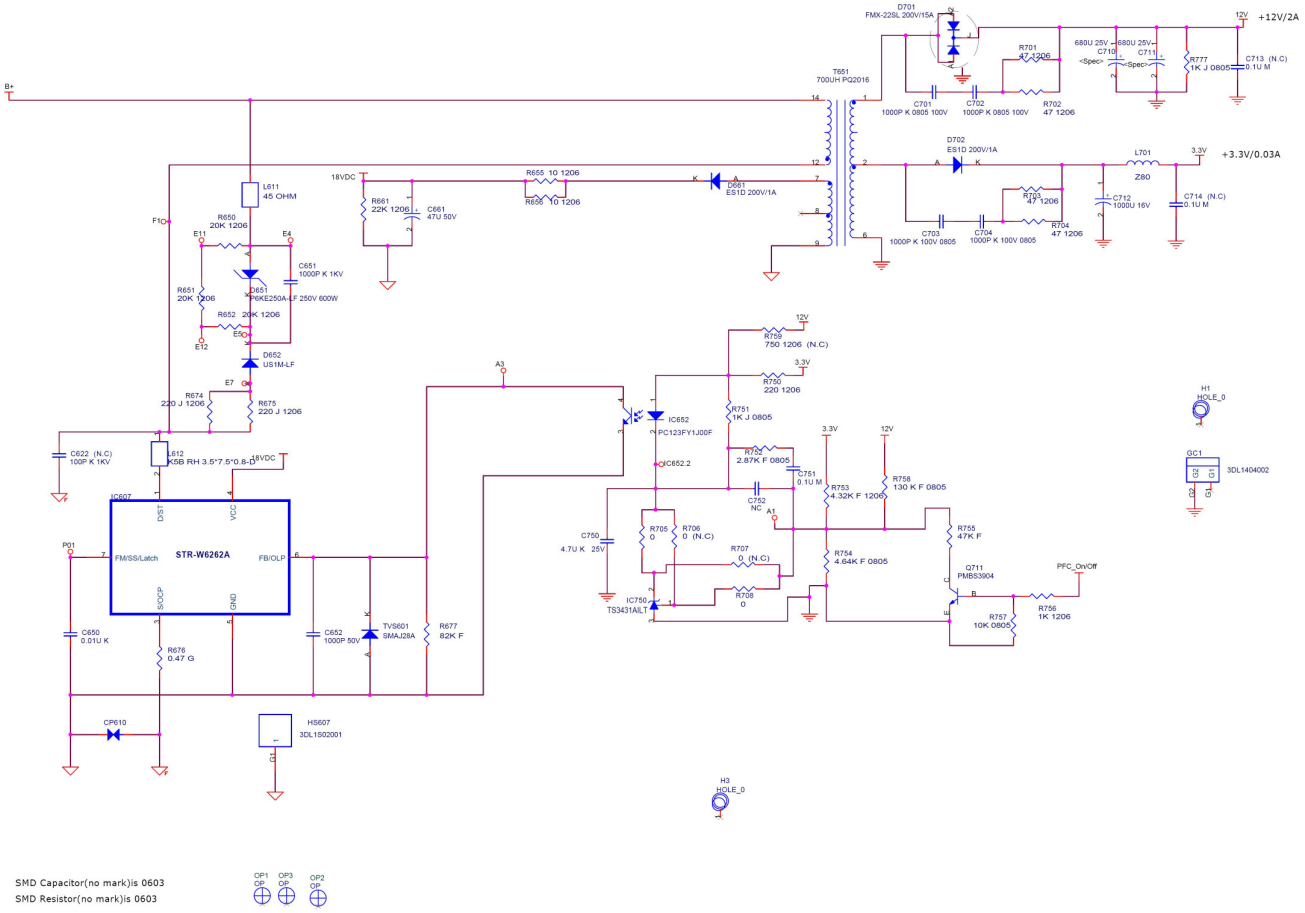
+12V/2A
+3.3V/0.03A
STR-W6262A
SMD Capacitor(no mark)is 0603
SMD Resistor(no mark)is 0603

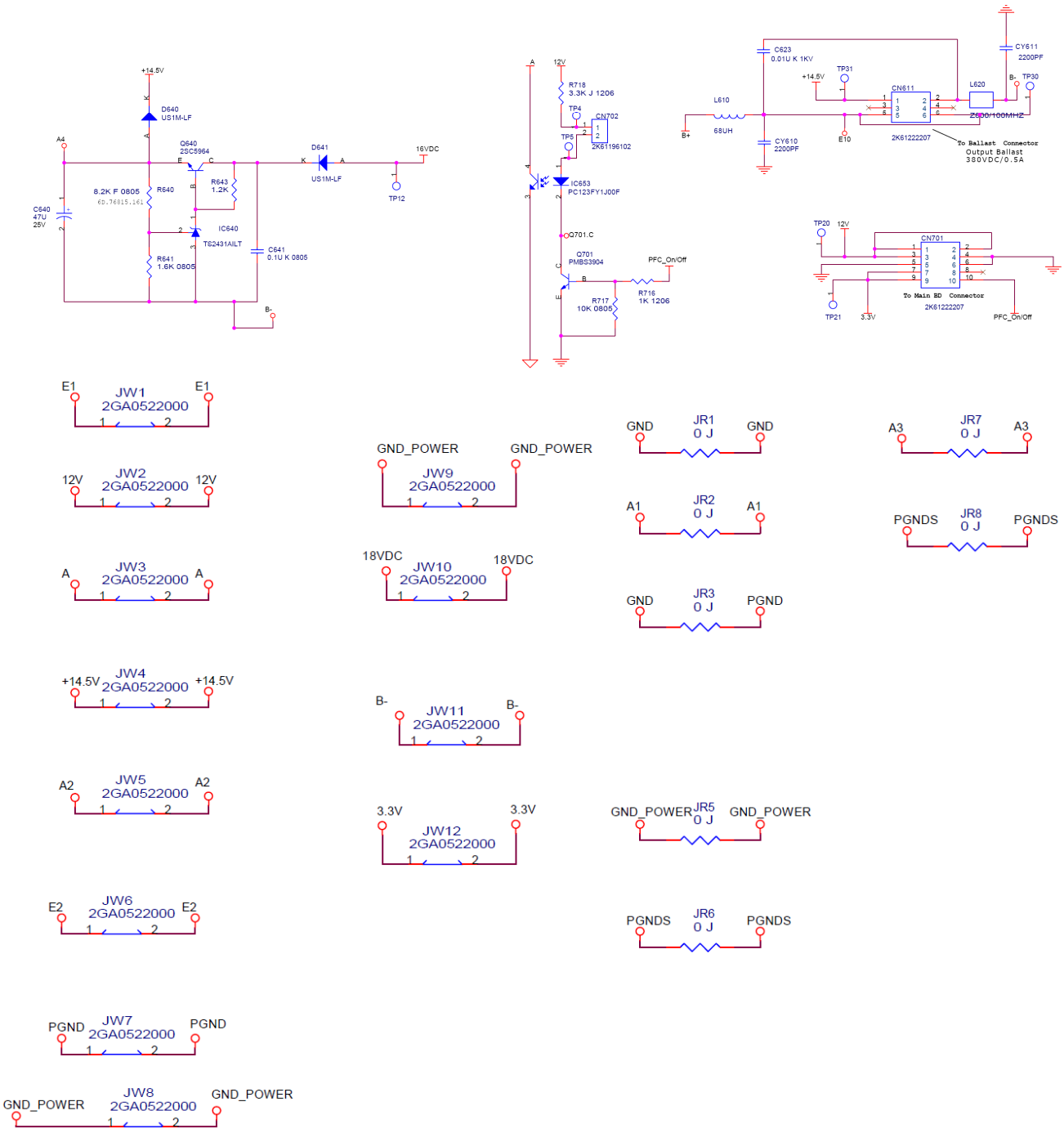
+14.5V
D640
US1M-LF
A4
Q640
2SC5964
D641
US1M-LF
16VDC
TP12
8.2K F 0805
6D.76815.161
R640
R643
1.2K
C640
47U
25V
IC640
TS2431AILT
R641
1.6K 0805
C641
0.1U K 0805
B-
12V
R718
3.3K J 1206
TP4
CN702
2K61196102
TP5
IC653
PC123FY1J00F
Q701.C
Q701
PMBS3904
PFC_On/Off
R717
10K 0805
R716
1K 1206
C623
0.01U K 1KV
TP31
CN611
L620
CY611
2200PF
TP30
L610
68UH
B+
CY610
2200PF
E10
2K61222207
To Ballast Connector
Output Ballast
380VDC/0.5A
TP20
CN701
To Main BD Connector
2K61222207
TP21
3.3V
PFC_On/Off
JW1
2GA0522000
E1
JW2
2GA0522000
12V
JW3
2GA0522000
A
JW4
2GA0522000
+14.5V
JW5
2GA0522000
A2
JW6
2GA0522000
E2
JW7
2GA0522000
PGND
JW8
2GA0522000
GND_POWER
JW9
2GA0522000
GND_POWER
JW10
2GA0522000
18VDC
JW11
2GA0522000
B-
JW12
2GA0522000
3.3V
JR1
0 J
GND
JR2
0 J
A1
JR3
0 J
PGND
JR5
0 J
GND_POWER
JR6
0 J
PGNDS
JR7
0 J
A3
JR8
0 J
PGNDS